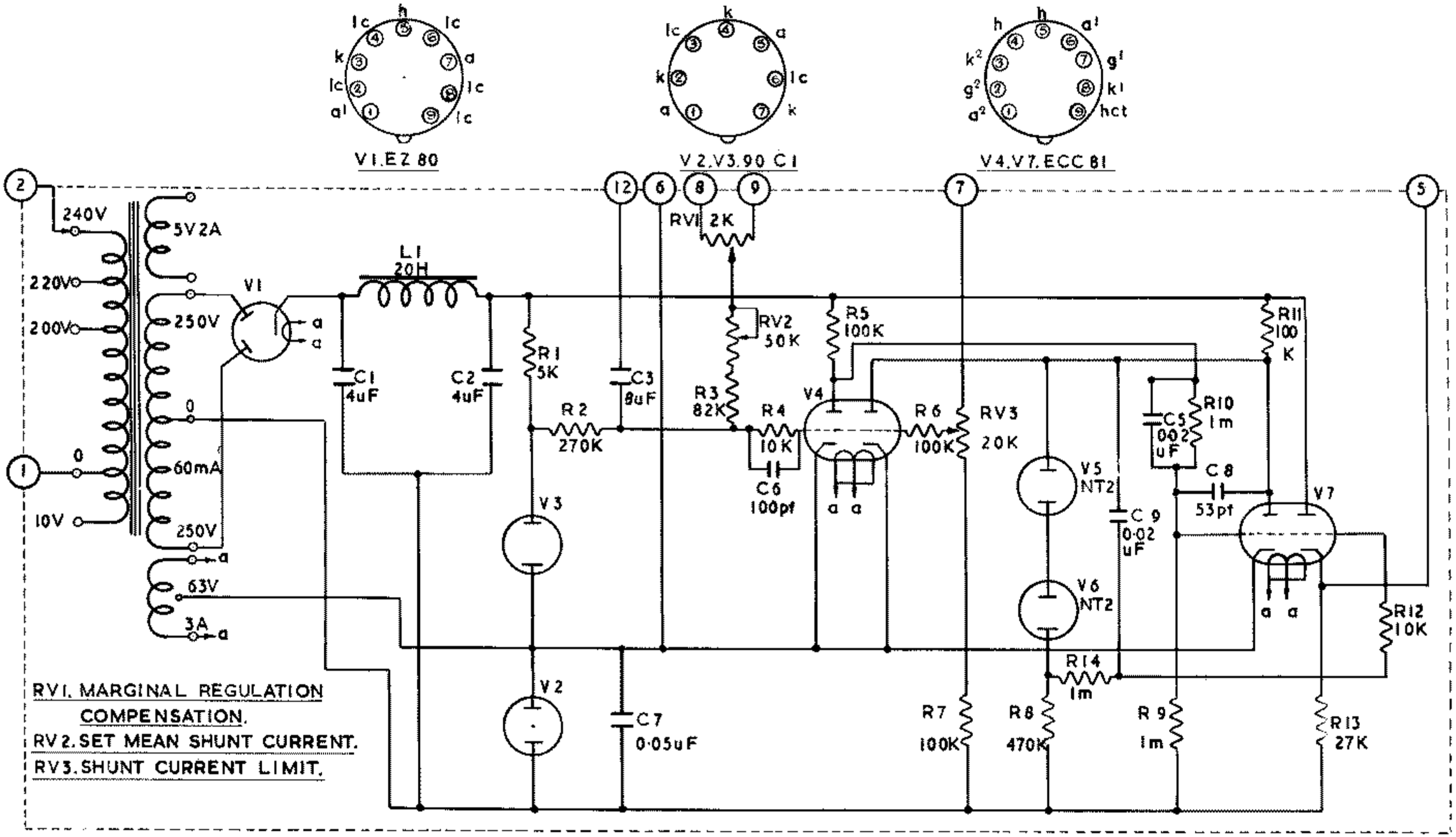

CONTROL AMPLIFIER. TYPE 20698.

FIG. 2.14