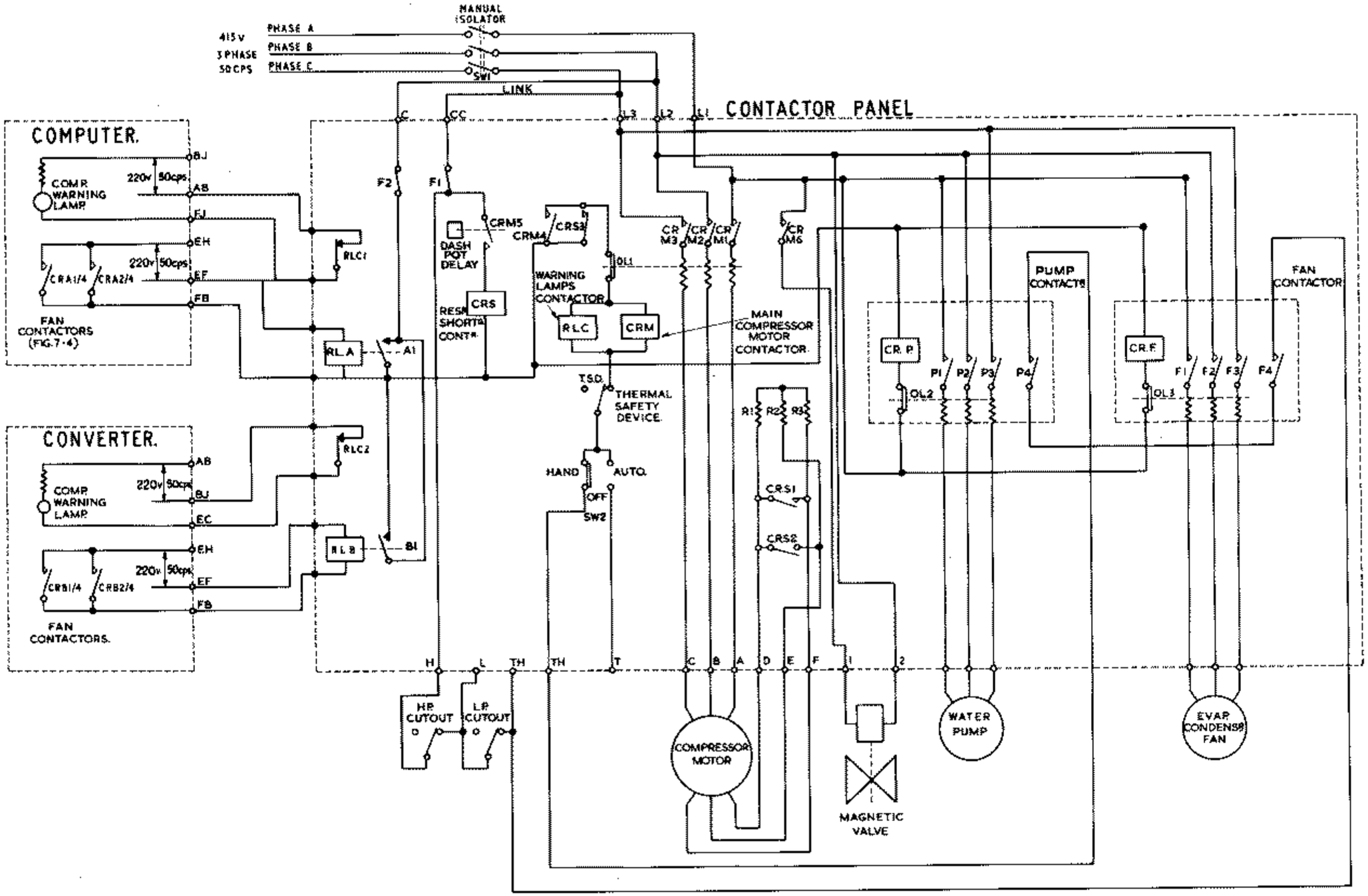

REFRIGERATION SYSTEM INTERCONNECTION. (EVAPORATIVE COOLING).

FIG. 7.5