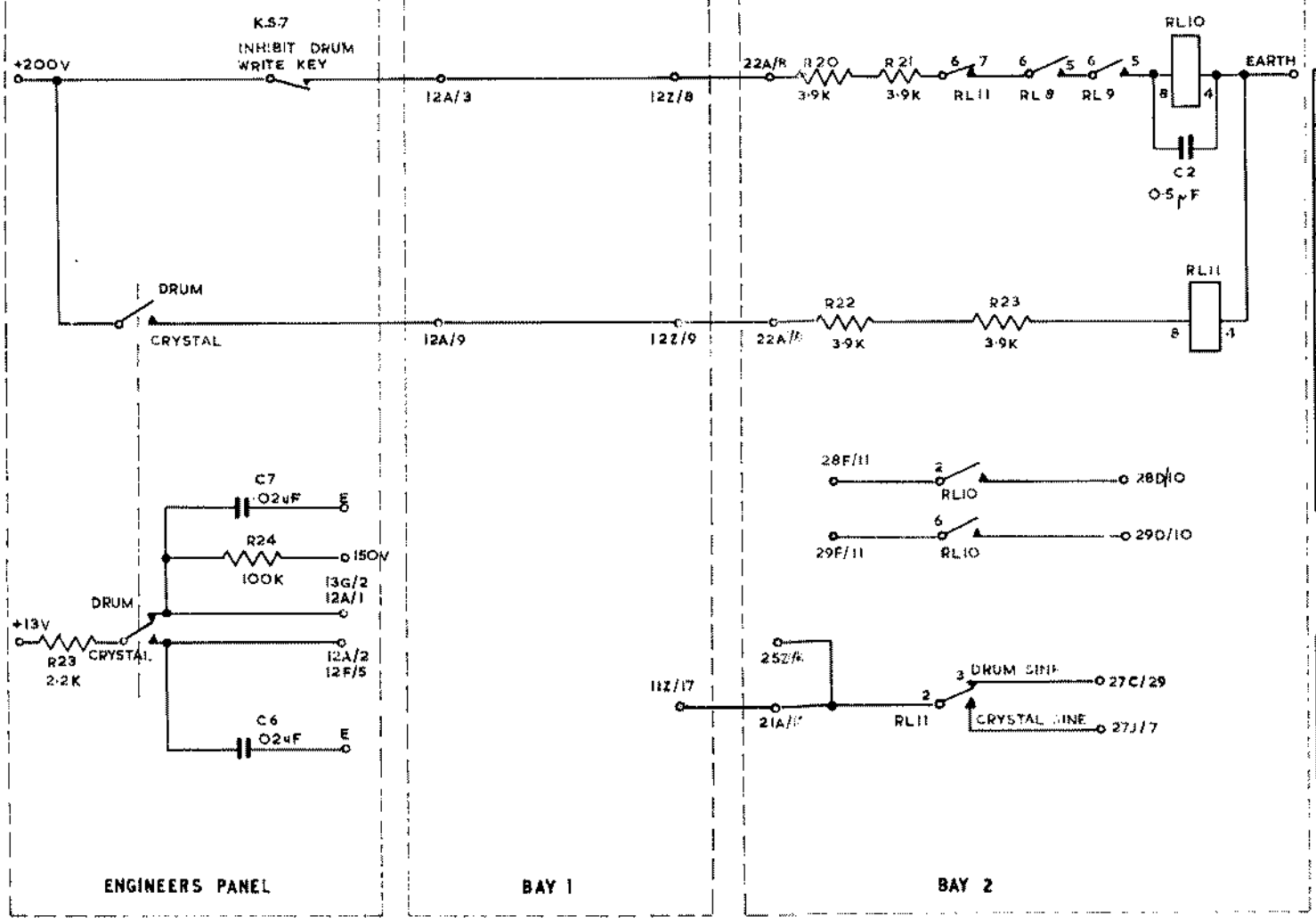

BAY 2

CIRC REF.	VALUE	TOL%	RAT	TYPE
R20	3·9K	±5%	3W	WELWYN TYPE AW3115
R21	3·9K	±5%	3W	WELWYN TYPE AW 3115
R22	3·9K	±5%	3W	WELWYN TYPE AW3115
R23	3·9K	±5%	3 W	WELWYN TYPE AW 3115
RL10				S.T.C.4184 G.E
RL11				S.T.C.4184 G.E
C 2	0·5μF	20%		T.C.C. CP47 N

ENGINEERS PANEL

C 6	·02μF	±20%		T.C.C. CP 33 N
C 7	·02μF	±20%		T.C.C. CP33 N
R23	2·2K	±10%		ERIE TYPE 9
R24	330K	±5%		ERIE TYPE 10

FIG. 4.5

INHIBIT DRUM WRITE AND CRYSTAL/CLOCK SWITCHING.