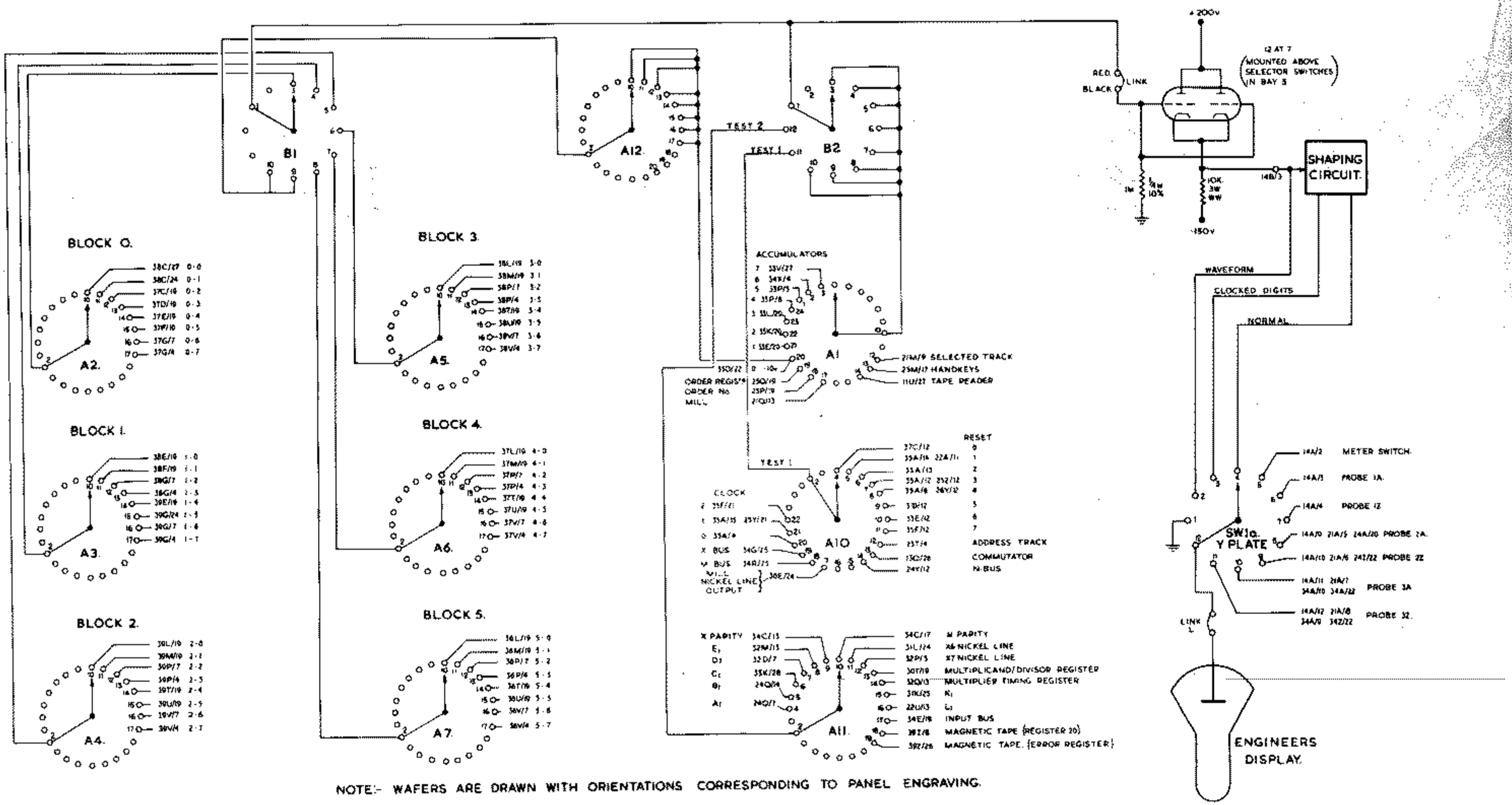

NOTE:- WAFERS ARE DRAWN WITH ORIENTATIONS CORRESPONDING TO PANEL ENGRAVING.

FIG. 17.2. SELECTOR SWITCHES FOR ENGINEER'S DISPLAY.

ISSUED JULY 1959.