RESISTORS TYPES & TOLS		CAPACITORS TYPES & TOLS	
ERIE TYPE 8 ±10%	R1, R2	TCC CP147KO	C1, C2
WELWYN TYPE VL ±5%	R206, R207, R208, R209,	" CP149W	C3, C5
WELWYN TYPE VL ±5%	R210 R211	" CE60 P	C4, C6
		CP 145W	C5

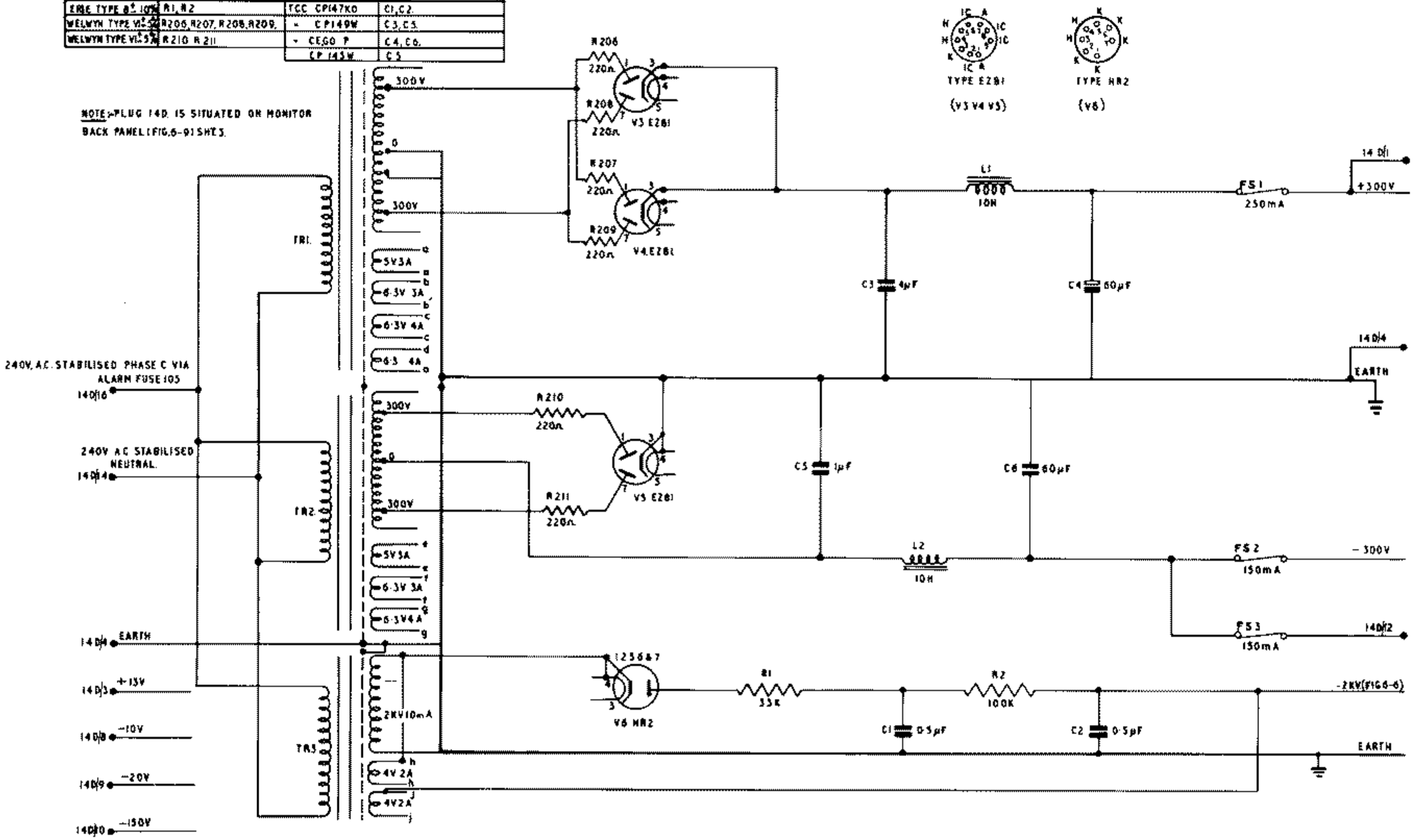

MONITOR POWER UNIT.

FIG. 6.8