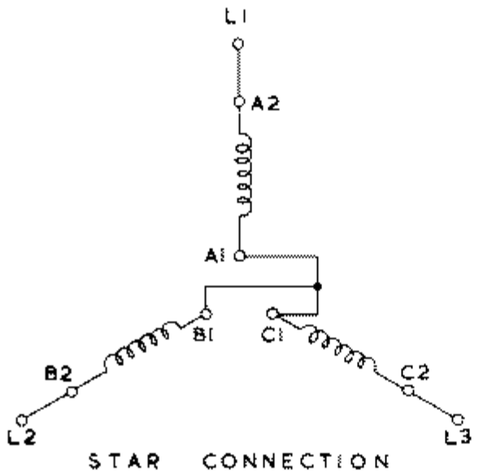

STAR CONNECTION

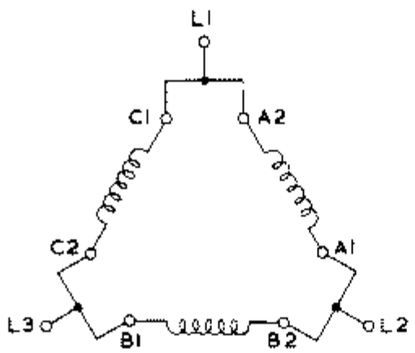

DELTA CONNECTION.

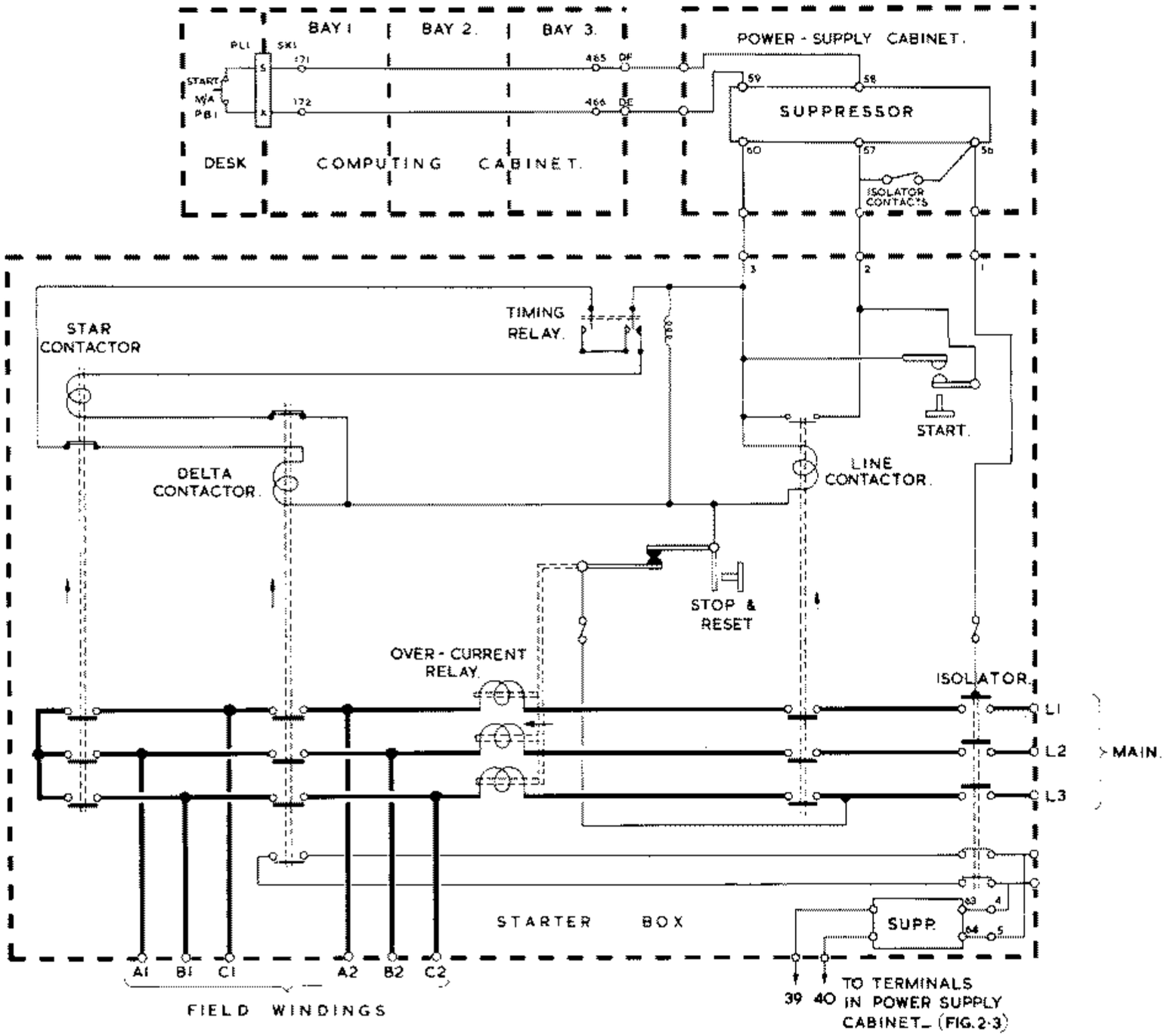

MOTOR-ALTERNATOR SWITCHING.

FIG. 2.1