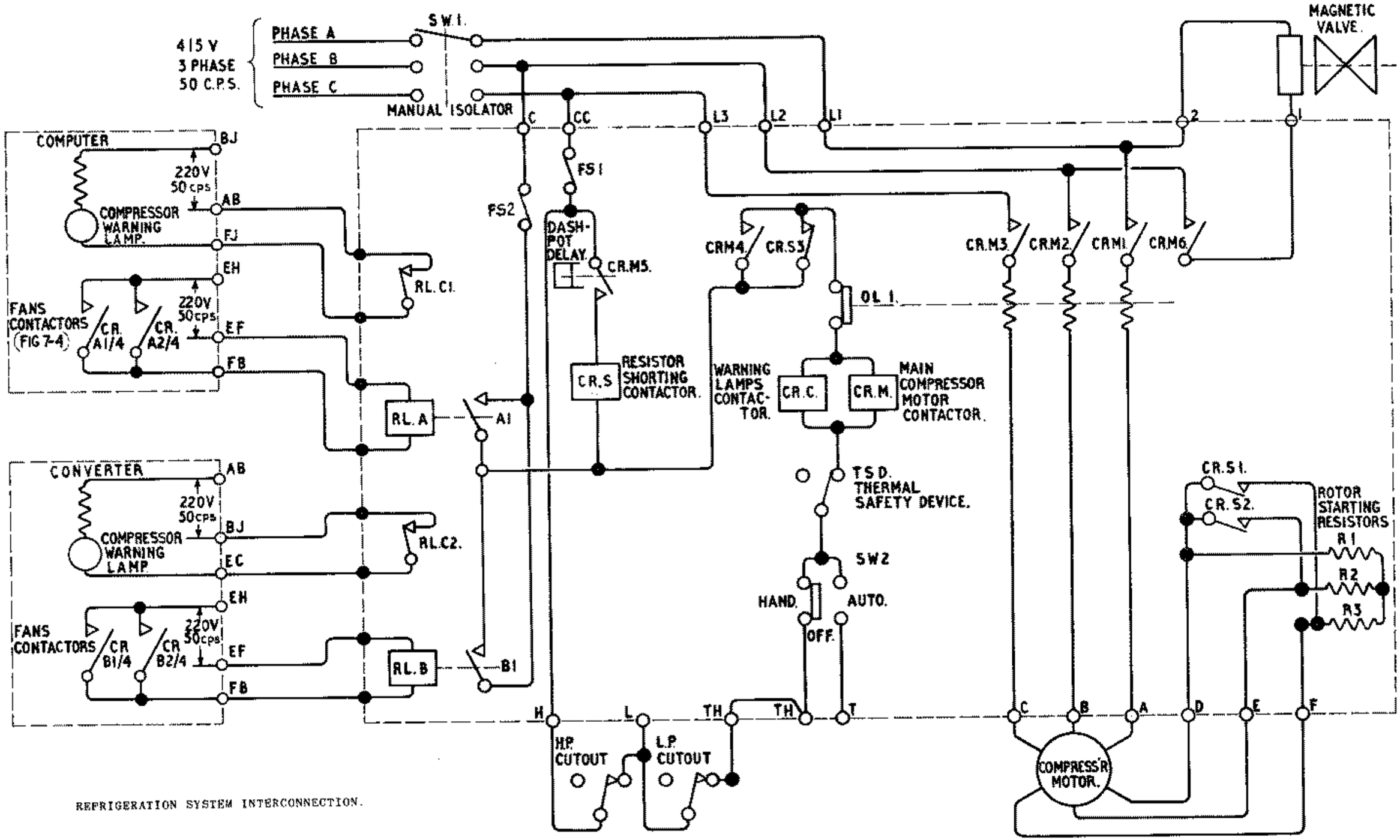

REFRIGERATION SYSTEM INTERCONNECTION.

(SHELL AND WATER TUBE CONDENSER COOLING).

FIG. 7.3