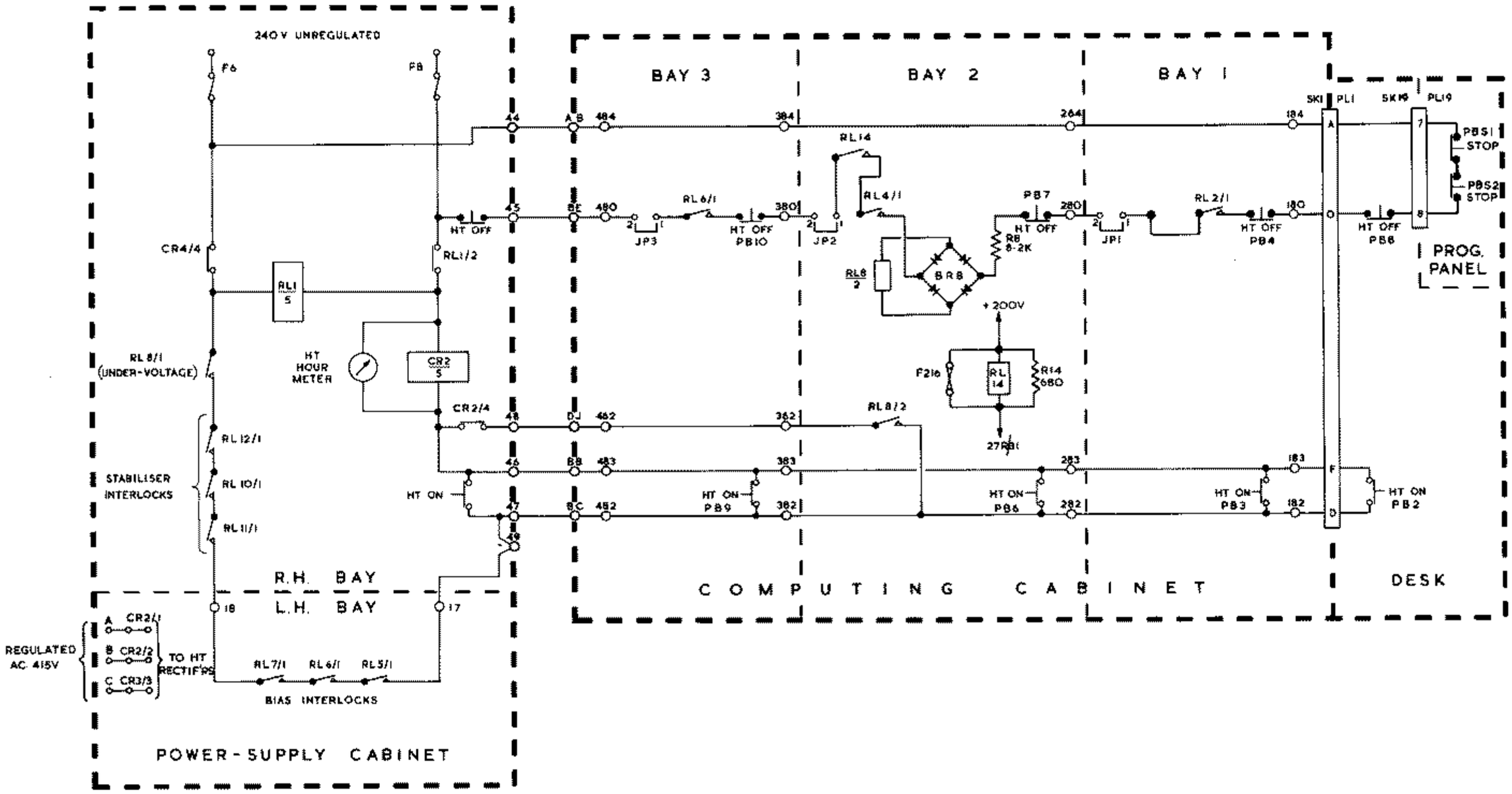

FIG. 2.7

H-T SWITCHING.