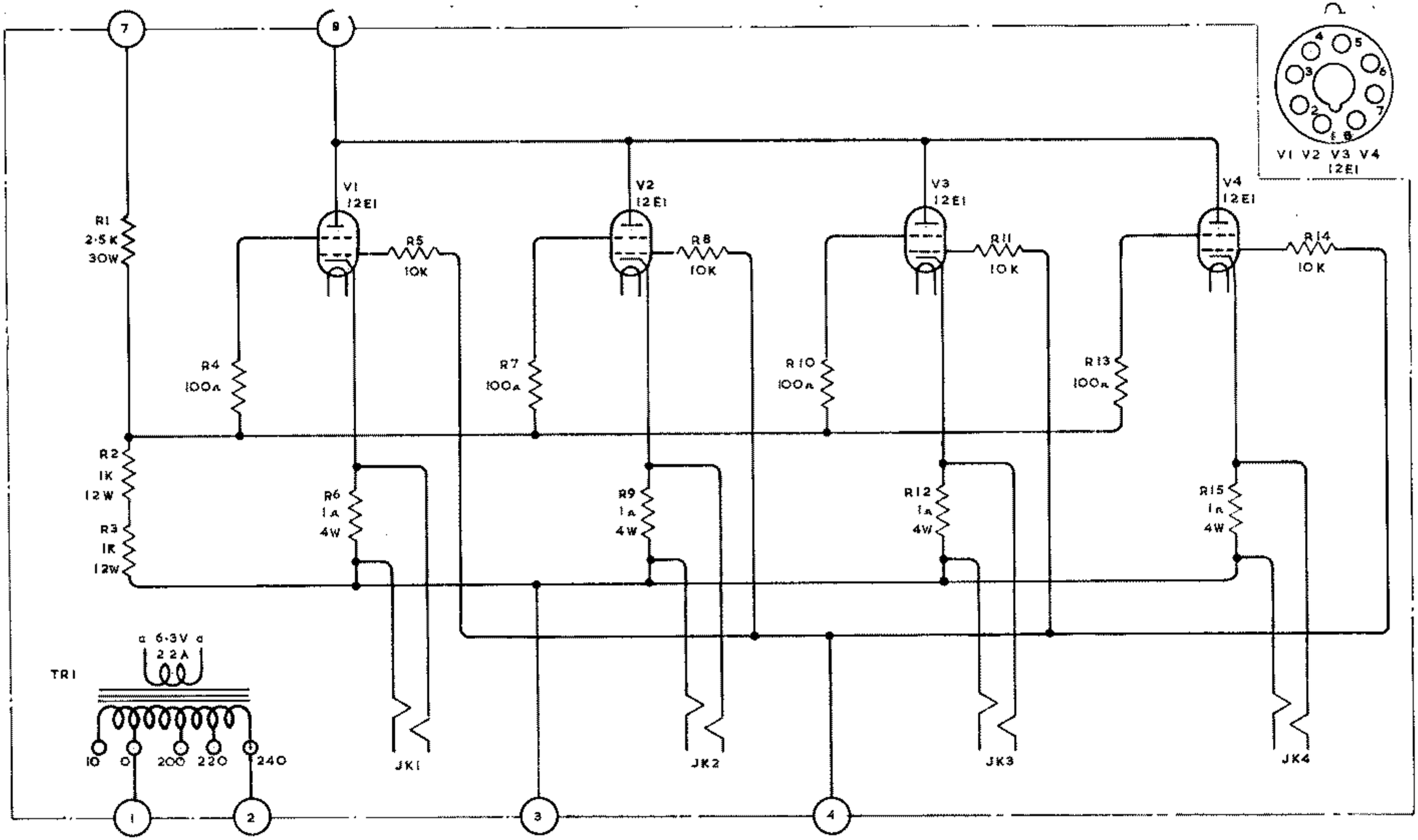

FIELD REGULATOR UNIT. TYPE 20695.

FIG. 2.15