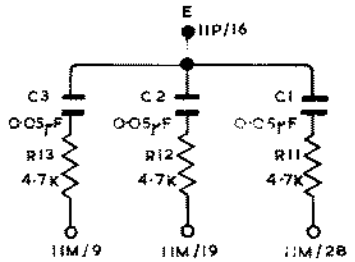

TAPE DRIVE SUPPRESSION.
(BAY 1, ROW 1.)

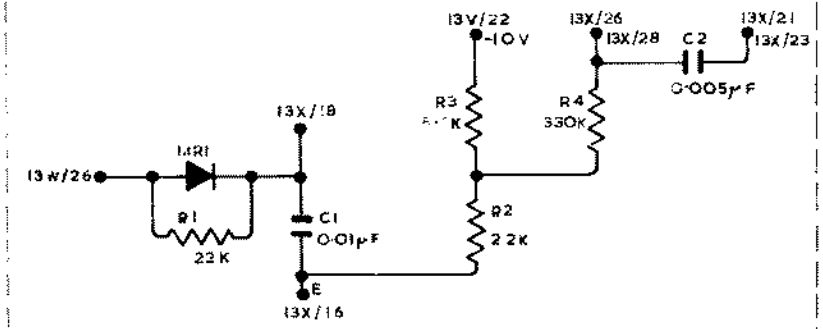

HOOTER CIRCUIT BIAS. (BAY 1, ROW 3.)

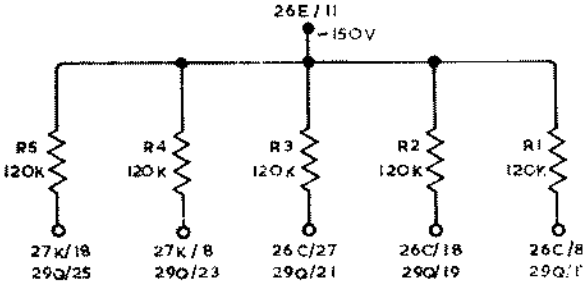

TRACK SELECTION DECODING BIAS. (BAY 2, ROW 6)

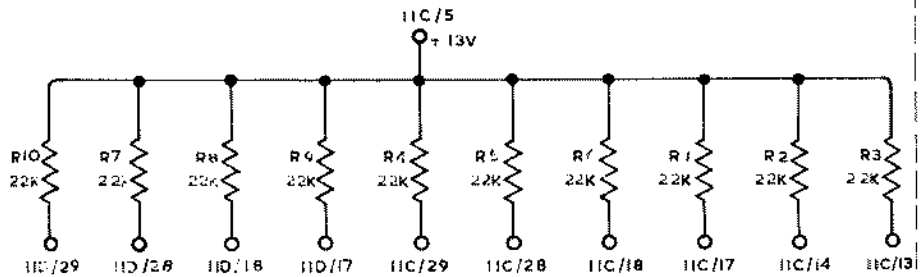

TAPE READER GATE RESISTORS. (BAY 1, ROW 1.)

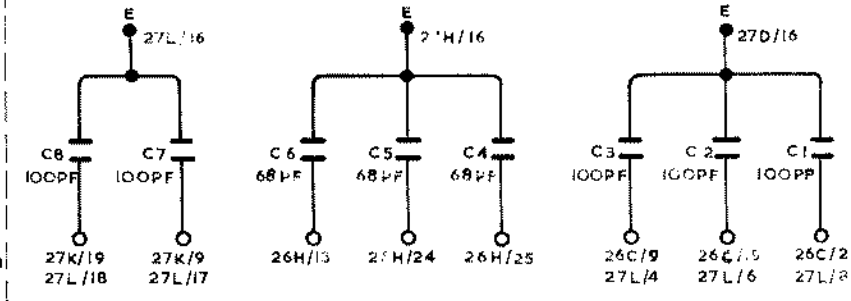

TRACK SELECTION SUPPRESSION. (BAY 2, ROW 7)

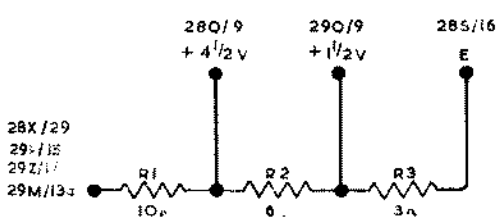

READ SWITCH CONTROL BIAS. (BAY 1, ROW 8)

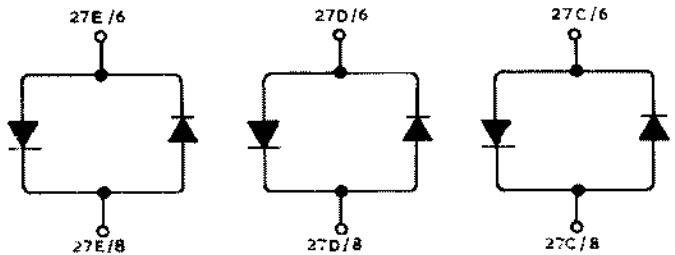

LIMITING CRYSTAL DIODES (BAY 2 ROW 7)

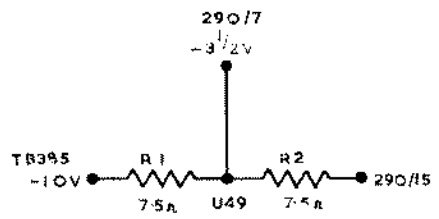

READ SWITCH CONTROL BIAS (BAY 2 ROW

BIAS, LIMITING AND SUPPRESSION CIRCUITS MOUNTED IN BACK WIRING.