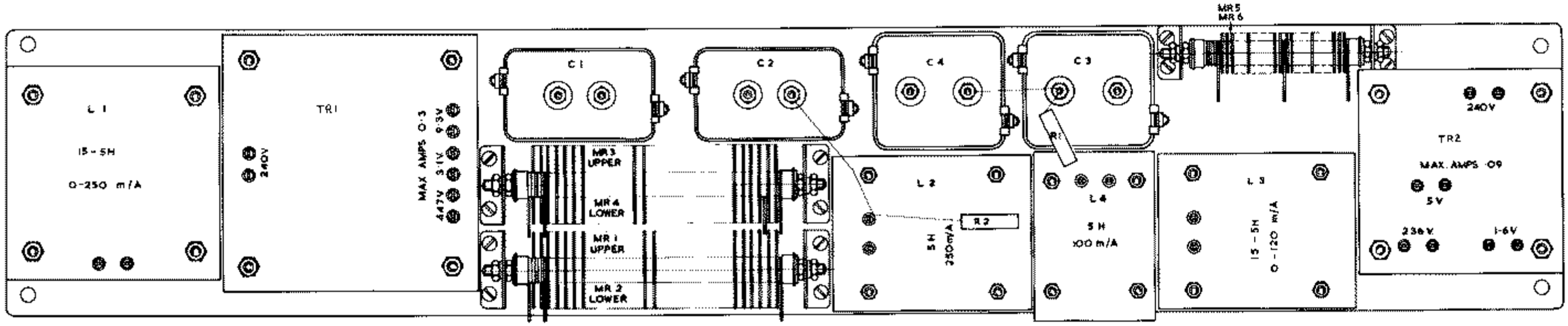

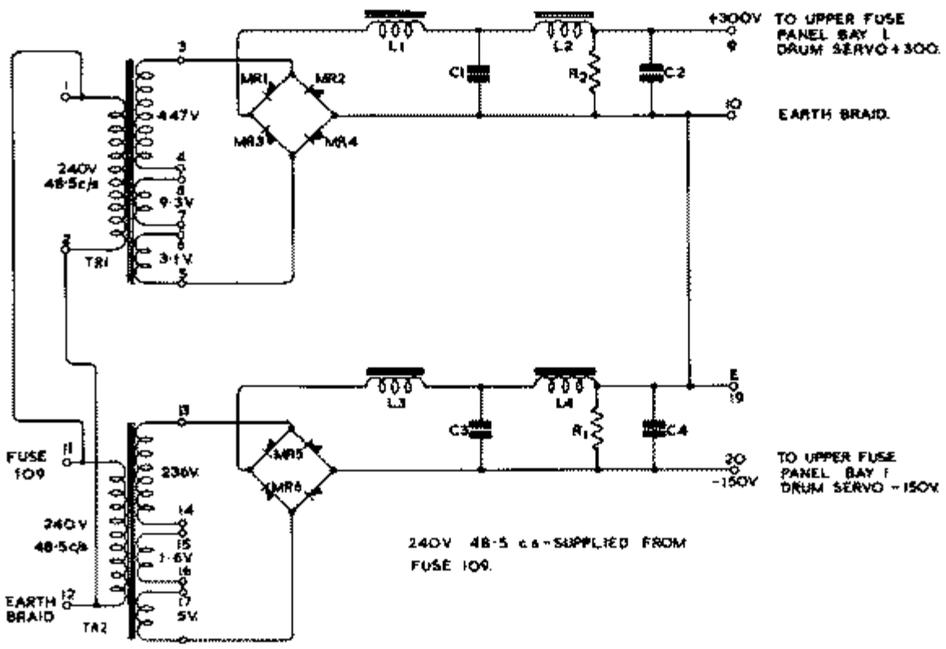

CIRCUIT REF	VALUE	TOL %	RATING	TYPE
T1				
T2				
L1	15-5H		250 mA.	
L2	5 H		250 mA.	
L3	15-5H		120 mA.	
L4	5 H		100 mA.	
C1	8μF	± 20	600 V.DC.	TCC CP 150T
C2	8μF	± 20	600V DC	TCC CP 150T
C3	4μF	± 20	600V DC	TCC CP 147T
C4	4μF	± 20	600V DC	TCC CP 147 T
MR1				STC HA40-25-1W
MR2				STC HA40-25-1W
MR3				STC.HA40-25-1W
MR4				STC.HA40-25-1W
MR5				STC D-18-12-1W
MR6				STC D-18-12-1W
R2	12K	± 5	10W	AW 3112
R1	12K	± 5	10W	AW 3112

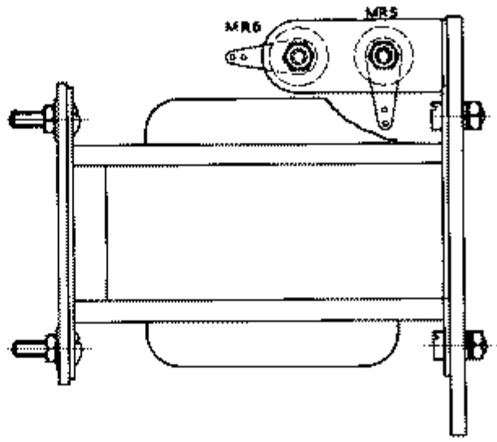

AUXILIARY H.T. UNIT. (DRUM SERVO).

FIG. 3.2