RELAY BOARD				
CIRCUIT REF	VALUE	TOL %	RATING	TYPE
R1 TO R14	330K	± 10	1/4 W	ERIE 9
R15 TO R20	3·3K	± 5	10 W	ZENITH TG0
R21 TO R23	6·8K	± 5	15 W	ZENITH TG1
R24 R25	10K	± 10	1/4 W	ERIE 9
R30	100Ω	± 10	1/4 W	ERIE 9
C1, C2, C3	1μF	± 20		TCC CP 142T
C4	0·1μF	± 20		TCC CP 37N
RL1 TO RL11				STC 4184GE

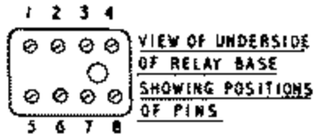

INPUT/OUTPUT EQUIPMENT BOARD				
CIRCUIT REF	VALUE	TOL %	RATING	TYPE
R11	27K	± 10	1/4W	ERIE 9
R12	2·7K	± 5	6W	WELWYN AW 3111
R13	2·7K	± 5	1/2W	ERIE 108
R14	27K	± 5	1/4W	ERIE 109
R15	150K	± 10	1/4W	ERIE 9
C1 TO C5	0·01μF	± 10		TCC CSM 20N
C6	0·002μF	± 25		TCC CP 30S
C7	25μF	± 20		TCC CP 48N

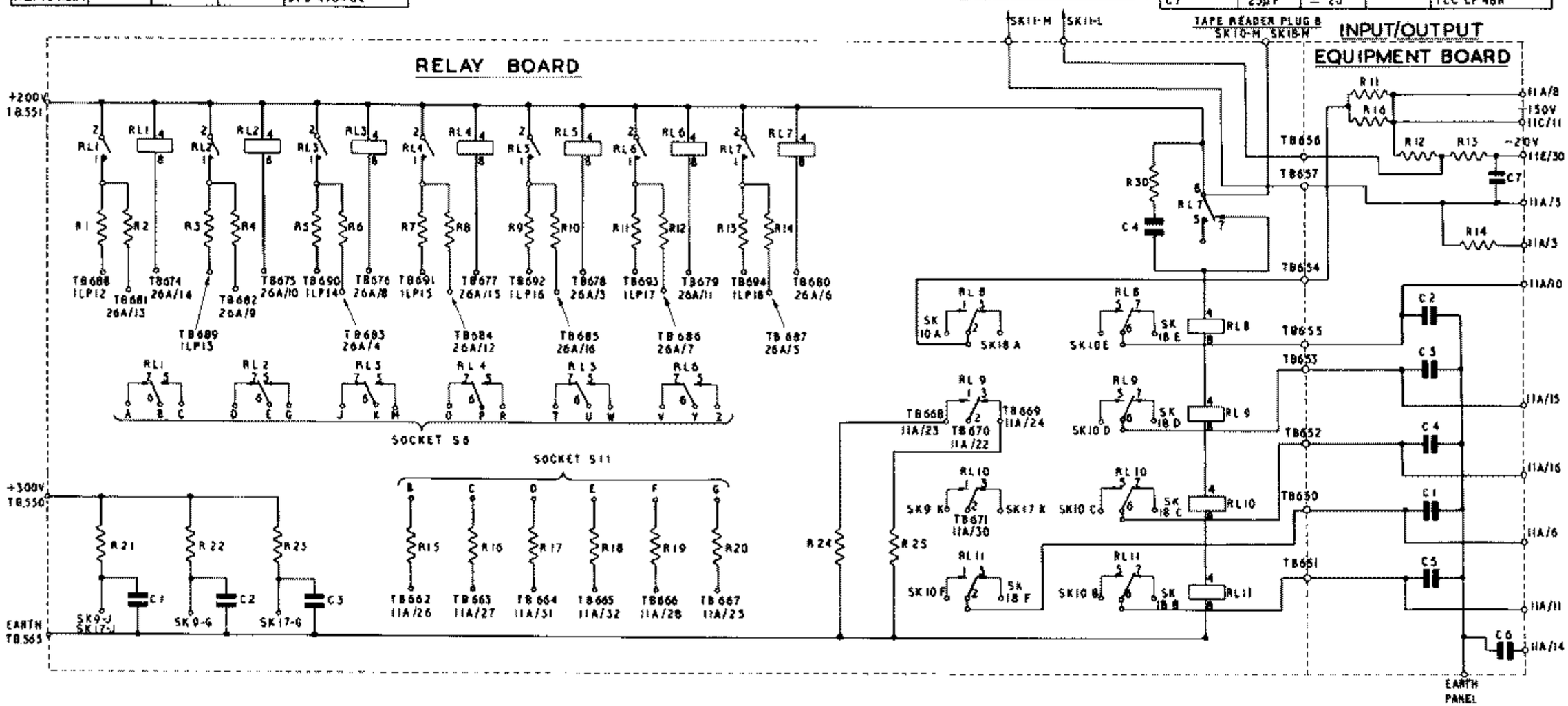

FIG. 5.1 (Sheet 2 of 2)

RELAY PANEL AND INPUT/OUTPUT EQUIPMENT BOARD.