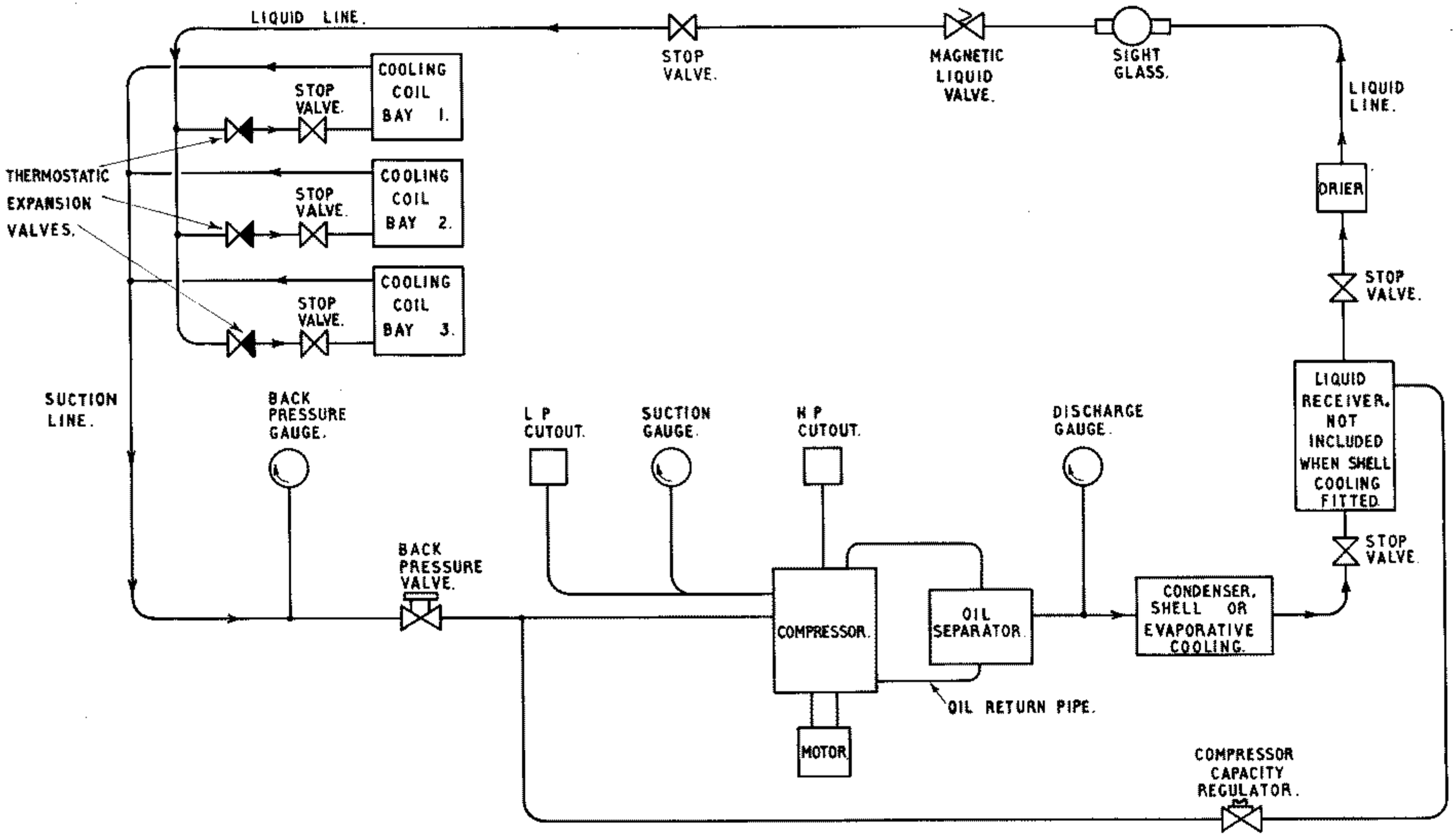

REFRIGERATION SYSTEM. BLOCK DIAGRAM.

FIG. 7.1