RESISTOR TYPES & TOLERANCE.	
8 ± 10%	160. 169. 157. 148. 147. 153.
9 ± 10%	158. 143. 144. 145. 149. 154. 165. 166. 167.
108 ± 5%	156. 150. 151. 152.
109 ± 5%	163. 164.
AW 3111	159. 168. 162. 146.
AW 3112	155.
AW 3115	161.

CAPACITOR TYPES & TOLERANCE.	
CP32N (TCC) 25%	70. 73. 65.
TCK 0330 (TCC)	71.
N750K (ERIE) 20%	72. 67.
HI. KK. (ERIE) 20%	68. 69.
CP37N (TCC) 20%	66.

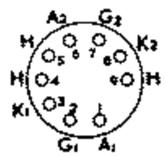

TYPE G6060.
(V32. V34.)

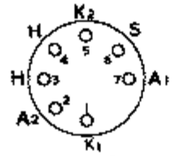

TYPE G6058.
(V33. V35. V36. V38.)

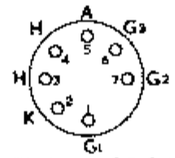

TYPE G6064.
(V37. V39.)

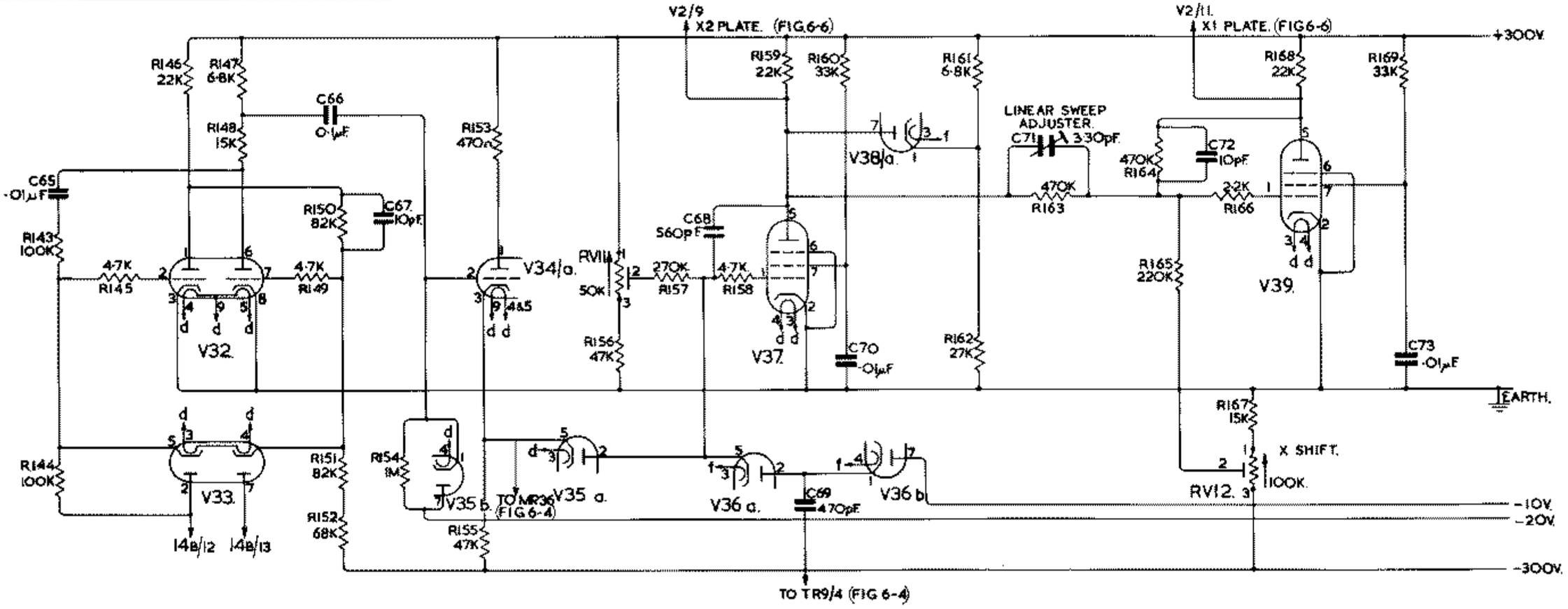

MONITOR C.R.T. TIME BASE. (R.H.S).

FIG. 6.1