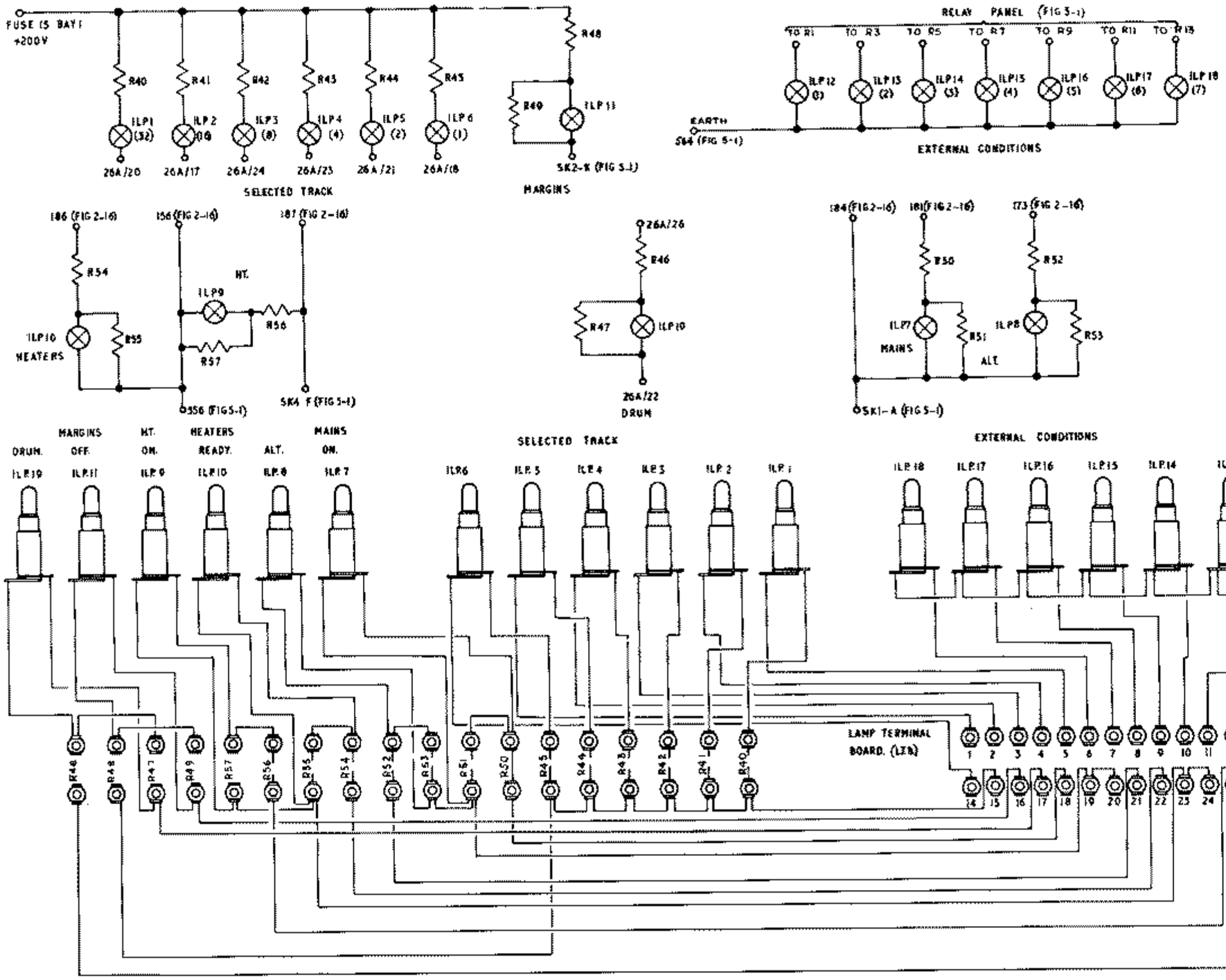

CIRCUIT REF.	VALUE.	TOL. %	RATING.	TYPE.
R40	330K	10 %	1/4W	ERIE TYPE 9
R41	"	"	"	" " "
R42	"	"	"	" " "
R43	"	"	"	" " "
R44	"	"	"	" " "
R45	"	"	"	" " "
R46	82K	"	"	" " "
R47	470K	"	"	" " "
R48	330K	"	"	" " "
R49	470K	"	"	" " "
R50	330K	"	"	" " "
R51	470K	"	"	" " "
R52	330K	"	"	" " "
R53	470K	"	"	" " "
R54	330K	"	"	" " "
R55	470K	"	"	" " "
R56	330K	"	"	" " "
R57	470K	"	"	" " "
ILP1—ILP19		"	"	NIVAC NEON CCBL

TAG NO.	MONITOR LAMP PANEL EXT. CONNECTIONS.
1	26A/21
2	26A/23
3	26A/24
4	26A/17
5	26A/20
6	TB694
7	TB693
8	TB692
9	TB691
10	TB690
11	TB689
12	TB564
13	TB688
14	26A/18
15	+200V FUSE
16	SKT. 2K
17	26A/22
18	181
19	184
20	SKT. 1A
21	TB173
22	TB186
23	——
24	TB556
25	SKT. 4F
26	26A/26

MONITOR LAMP PANEL.

FIG. 6.12