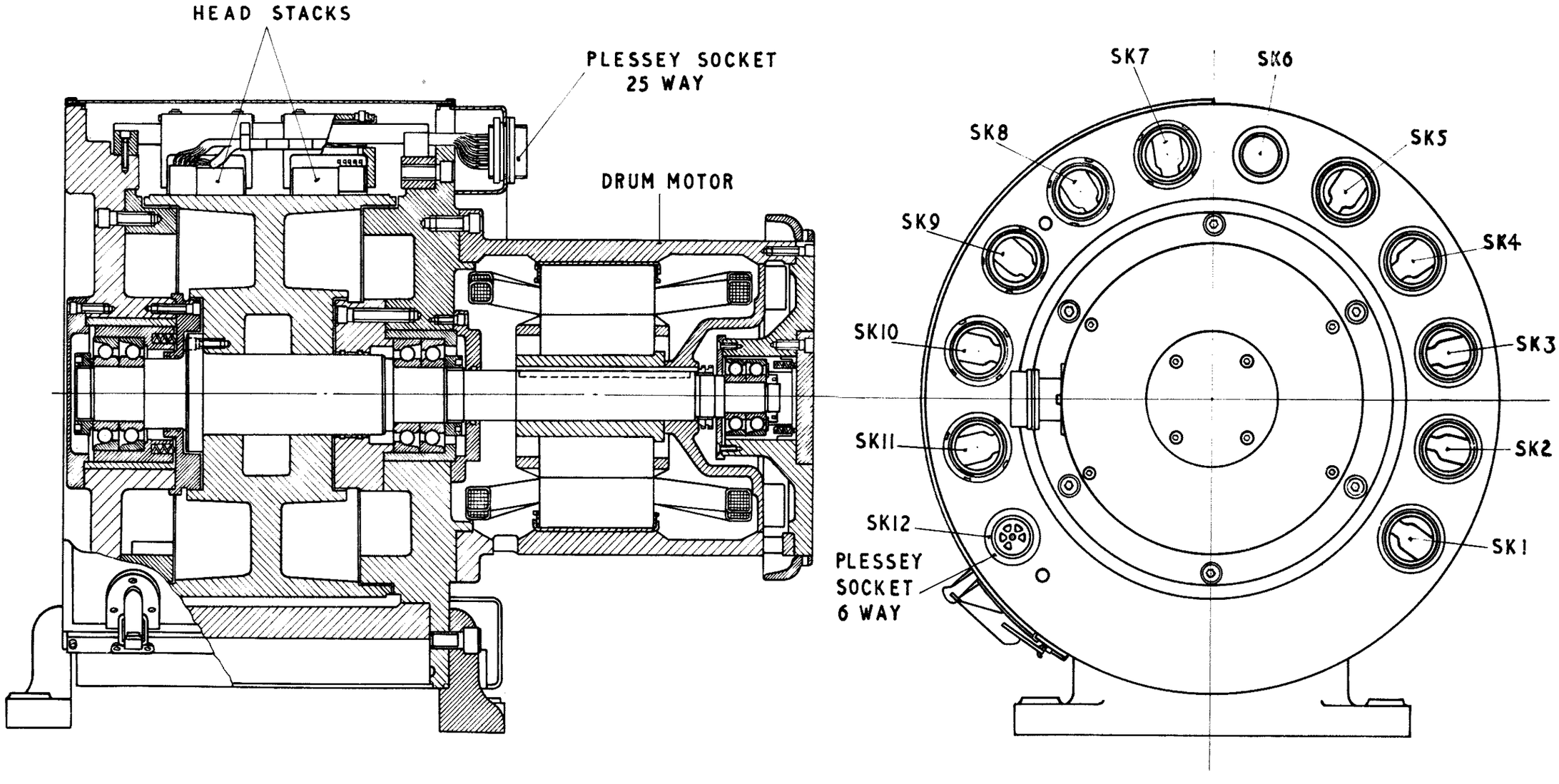

SOCKET MOUNTING RING

VIEWED FROM MOTOR END OF DRUM ASSEMBLY.

FIG. 4.1

MAGNETIC DRUM ASSEMBLY.