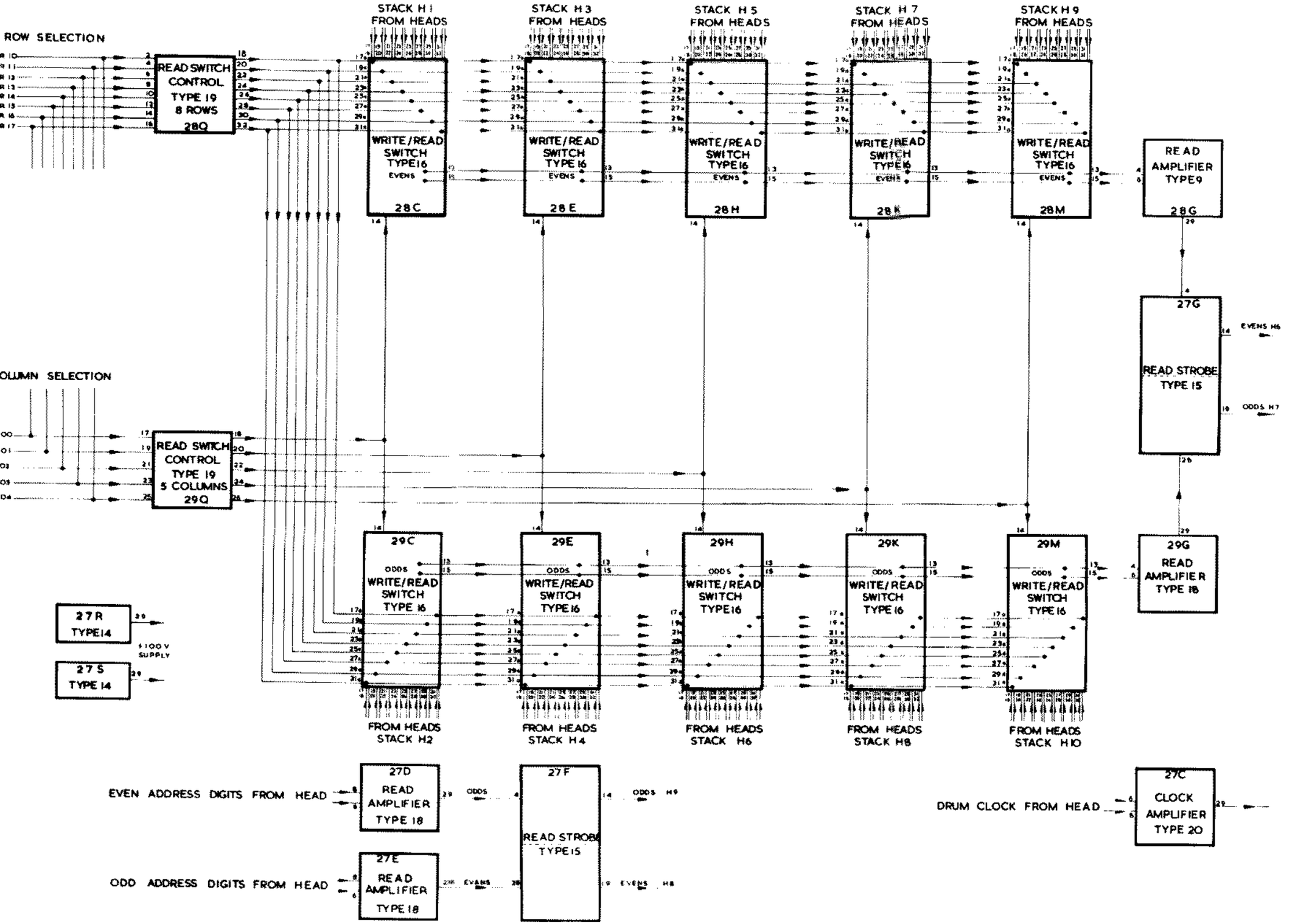

DRUM ELECTRONICS. (READING).

FIG. 4.2