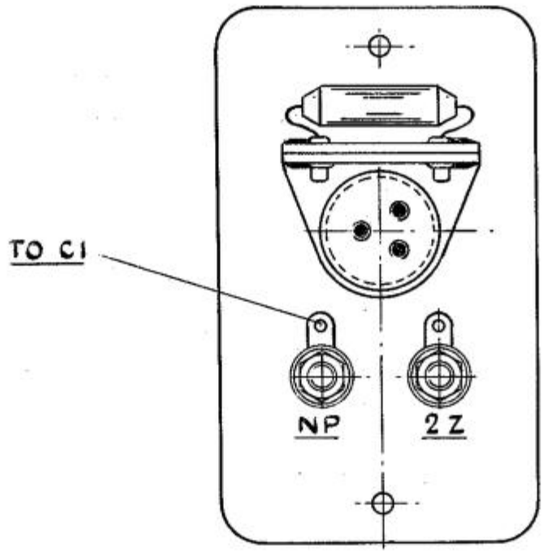

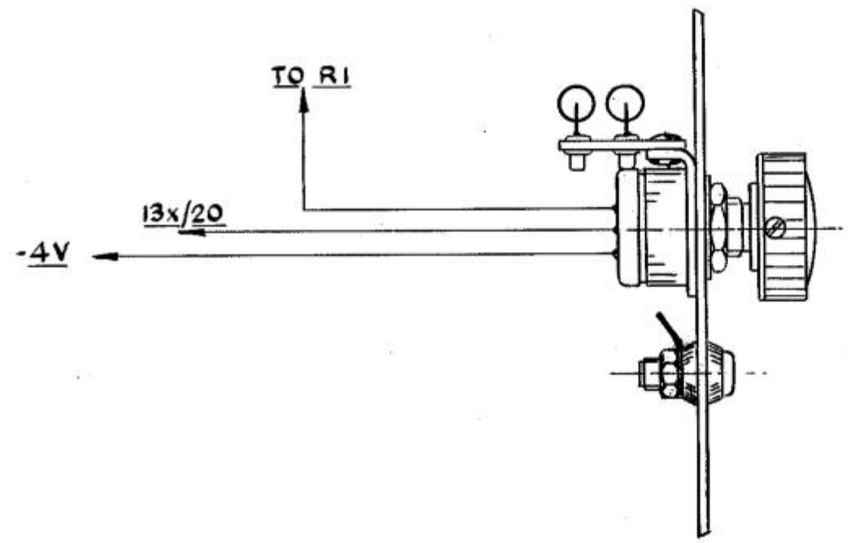

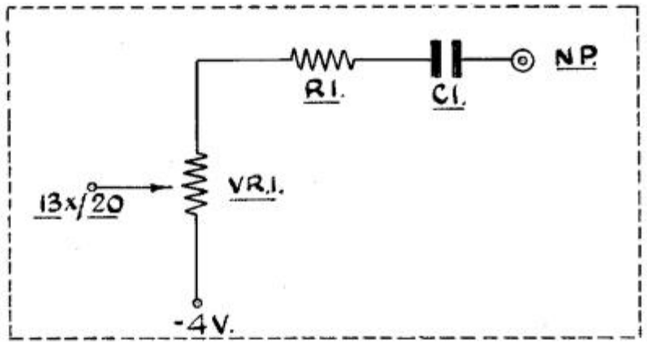

CIRCUIT WIRING DETAILS

TYPE AND TOLERANCE	
R.1	1m. TYPE BTS. DUBILIER
C.1.	0·01μF TYPE T.C.C. CP. 32N.
V.R.1.	1m. TYPE YN. DUBILIER.

NOISE POTENTIOMETER.

FIG. 2.19