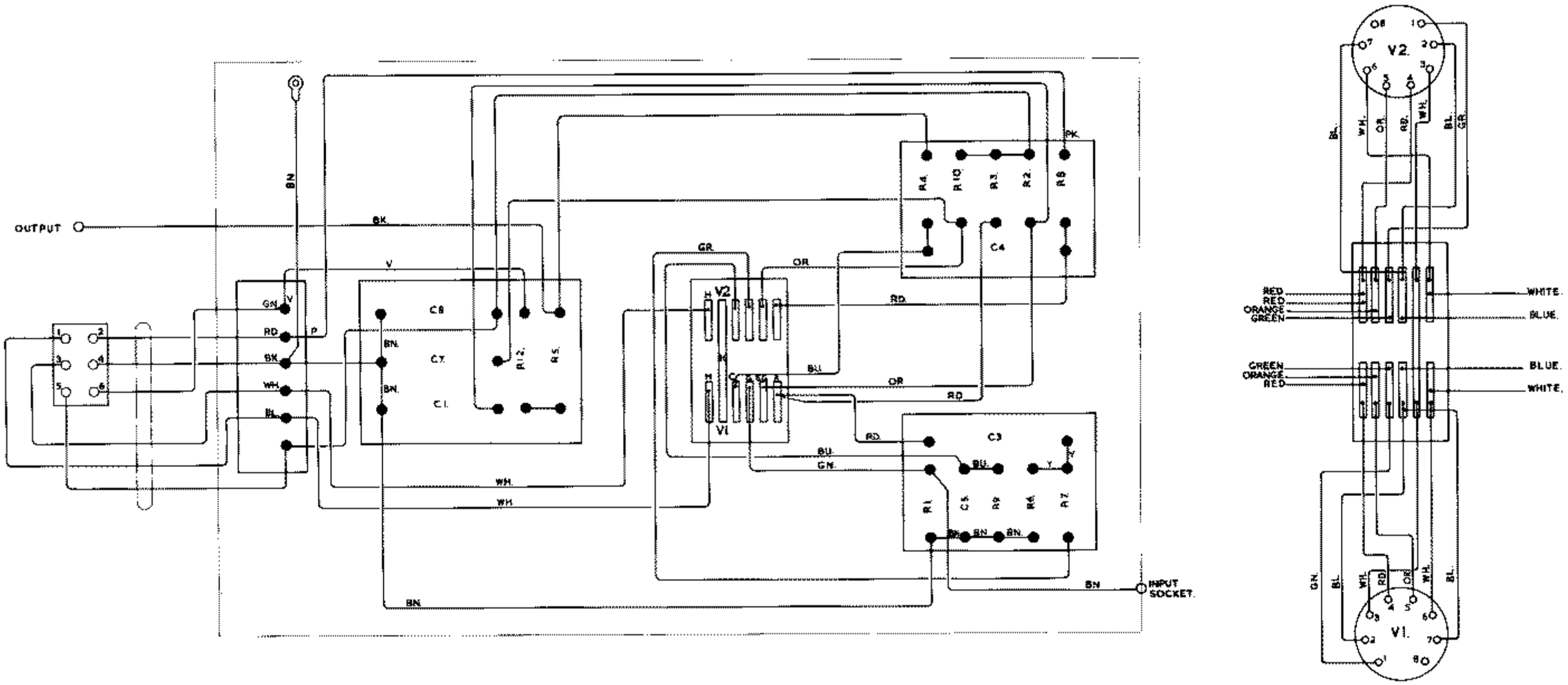

CATHODE FOLLOWER UNIT. (LAYOUT).

FIG. 6.10 (Sheet 2 of 2)