CIRCUIT REF.	VALUE	TOL. %	RATING	TYPE	CIRCUIT REF.	VALUE	TOL. %	RATING	TYPE
R20	3·9KΩ	± 5 %	3W	WELWYN AW 3115	C2	0.5μF	20%		TCC, CP47 N.
R21	3·9KΩ	± 5 %	3W	WELWYN AW 3115					
R22	3·9KΩ	± 5 %	3W	WELWYN AW 3115					
R23	3·9KΩ	± 5 %	3W	WELWYN AW 3115					

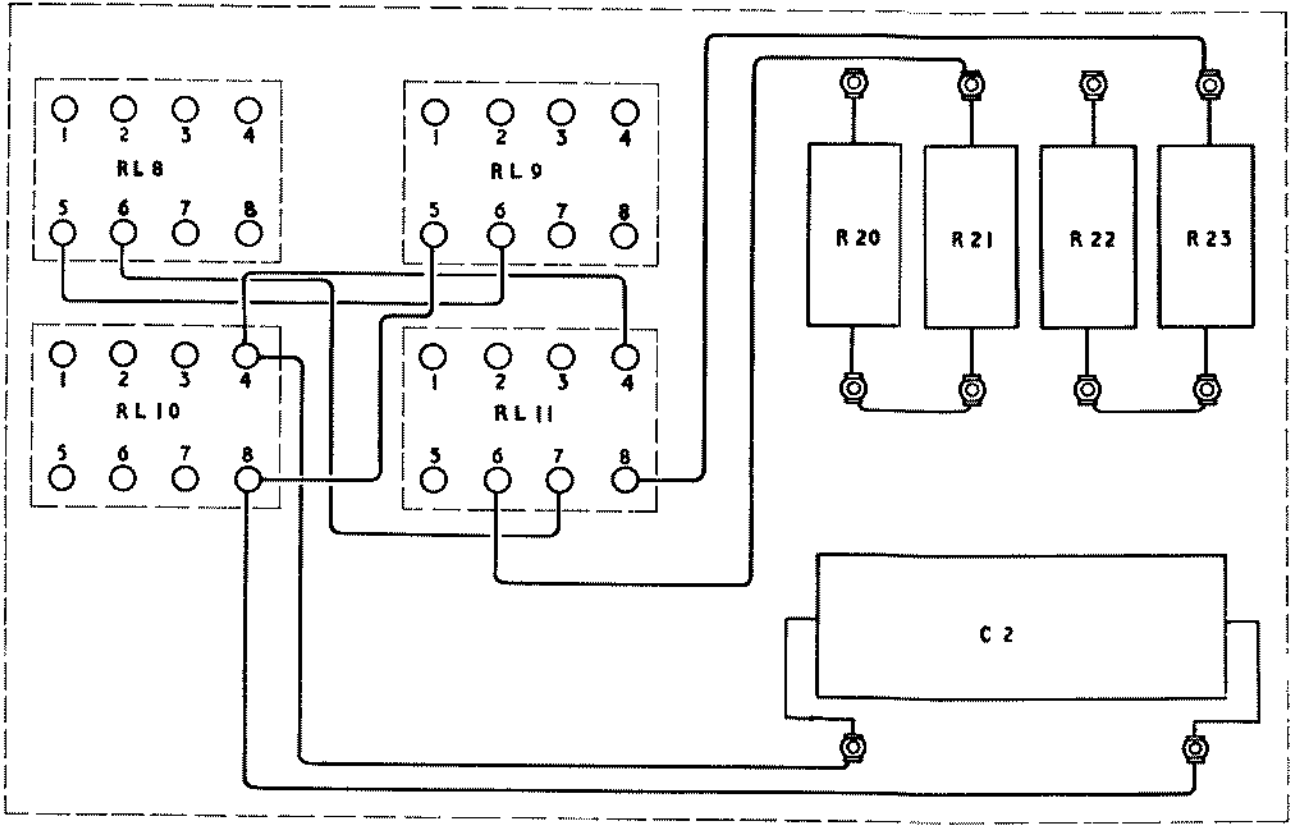

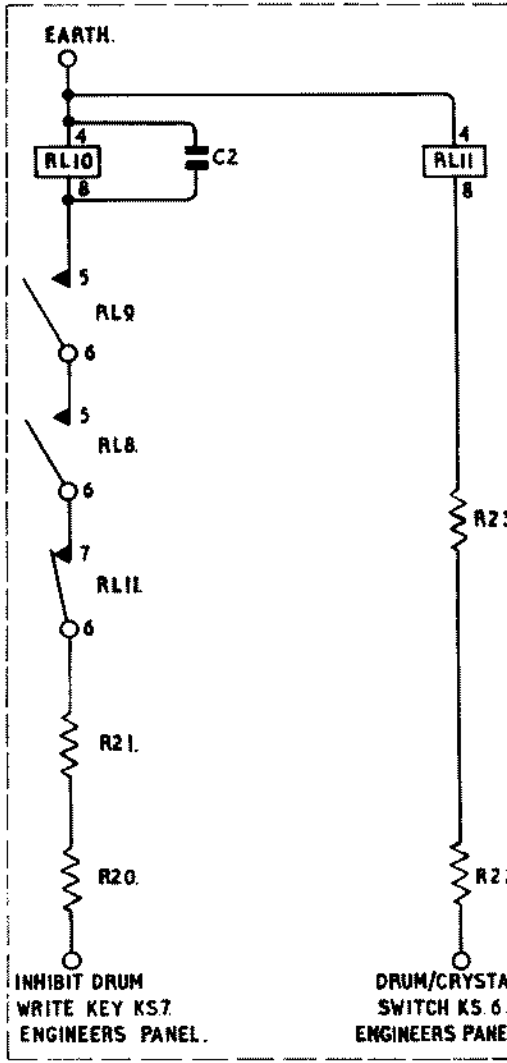

Fig 4.7

RELAY BRACKET.