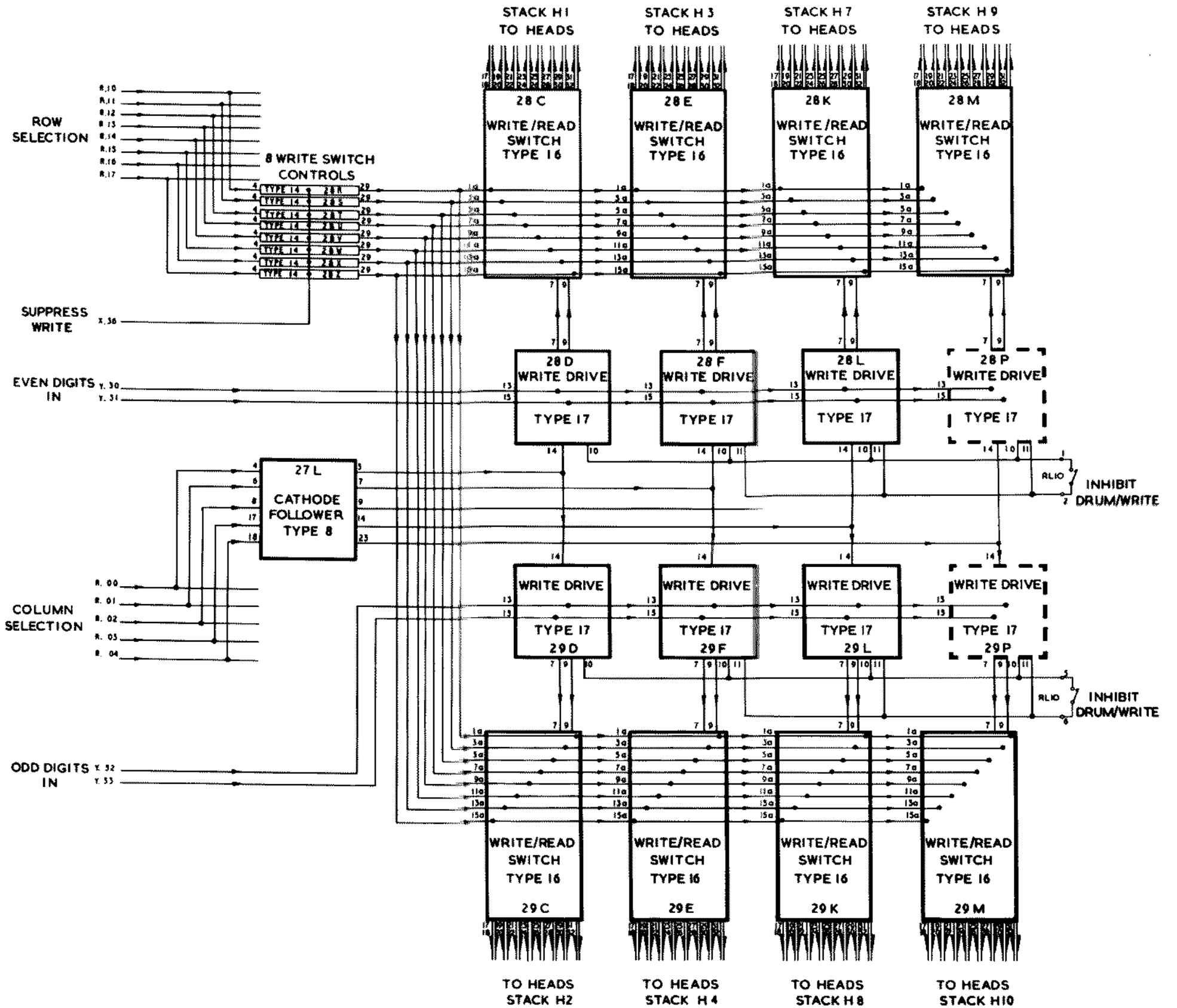

DRUM ELECTRONICS. (WRITING).

FIG. 4.3