CIRCUIT REF.	VALUE.	TOL.	RATING.	TYPE.	CIRCUIT REF.	VALUE.	TOL.	RATING.	TYPE.
R1	1MΩ	± 10%	1/4 WATT.	DUBILIER BTS	R10	33KΩ	± 10%	1/4 WATT.	ERIE 9.
R2	33KΩ	± 10%	"	ERIE 9.	R12	15KΩ	± 5%	"	ERIE 108.
R3	4·7KΩ	± 10%	"	" 9.	C1	·1μF	± 20%		T.C.C. CP37N.
R4	470Ω	± 10%	"	" 9.	C3	·01μF	± 20%		" CP32N.
R5	12KΩ	± 5%	"	" 108.	C4	·01μF	± 20%		" CP32N.
R6	1MΩ	± 10%	"	DUBILIER BTS	C5	·002μF	± 20%		" CP111N
R7	220Ω	± 10%	"	DUBILIER BTS.	C7	·1μF	± 20%		" CP37N.
R8	22KΩ	± 10%	"	ERIE 9.	C8	·1μF	± 20%		" CP37.
R9	390KΩ	± 10%	"	" 9.					

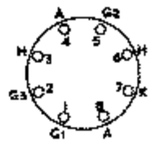

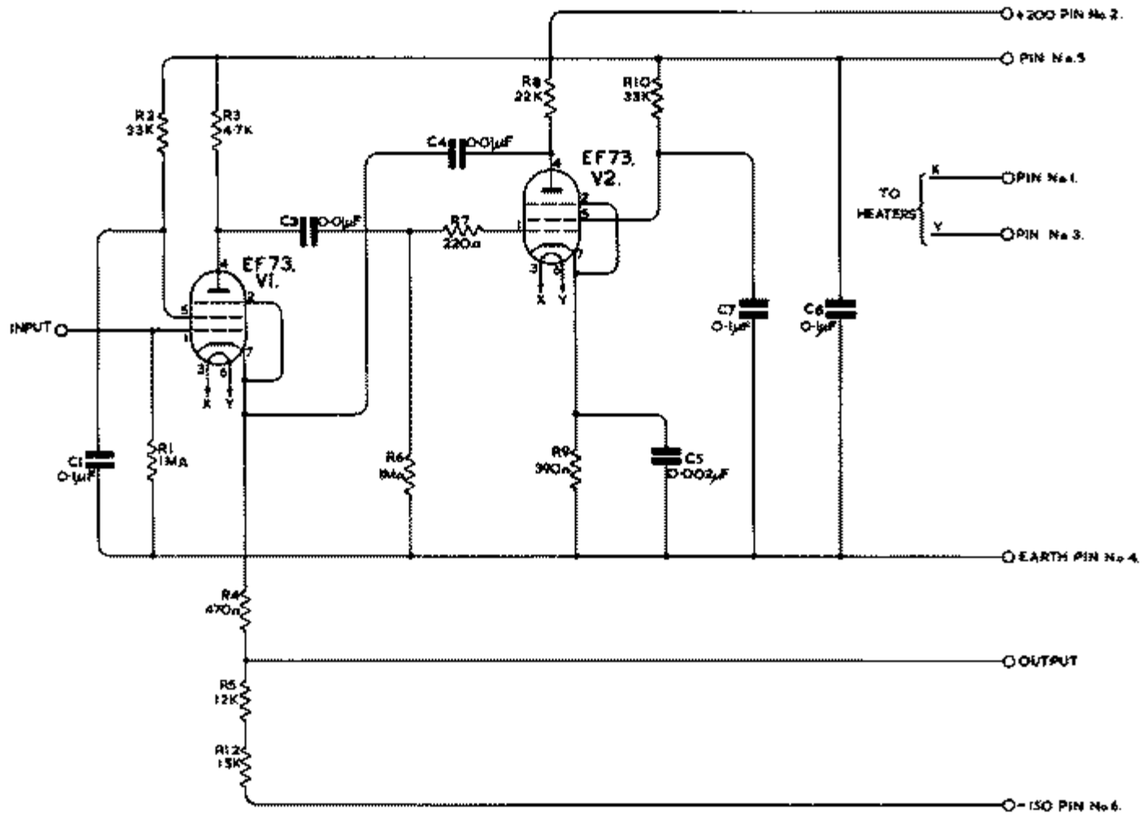

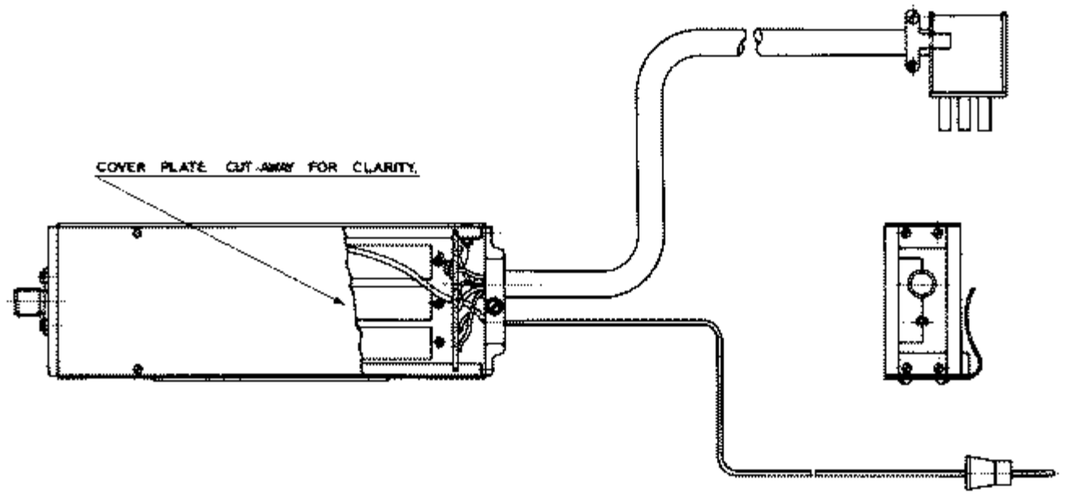

VIEW WITH SIDE PANEL REMOVED.

(CABLES & PLUGS REMOVED FOR CLARITY)

FIG. 6.10 (Sheet 1 of 2)

CATHODE FOLLOWER UNIT. (CIRCUIT).