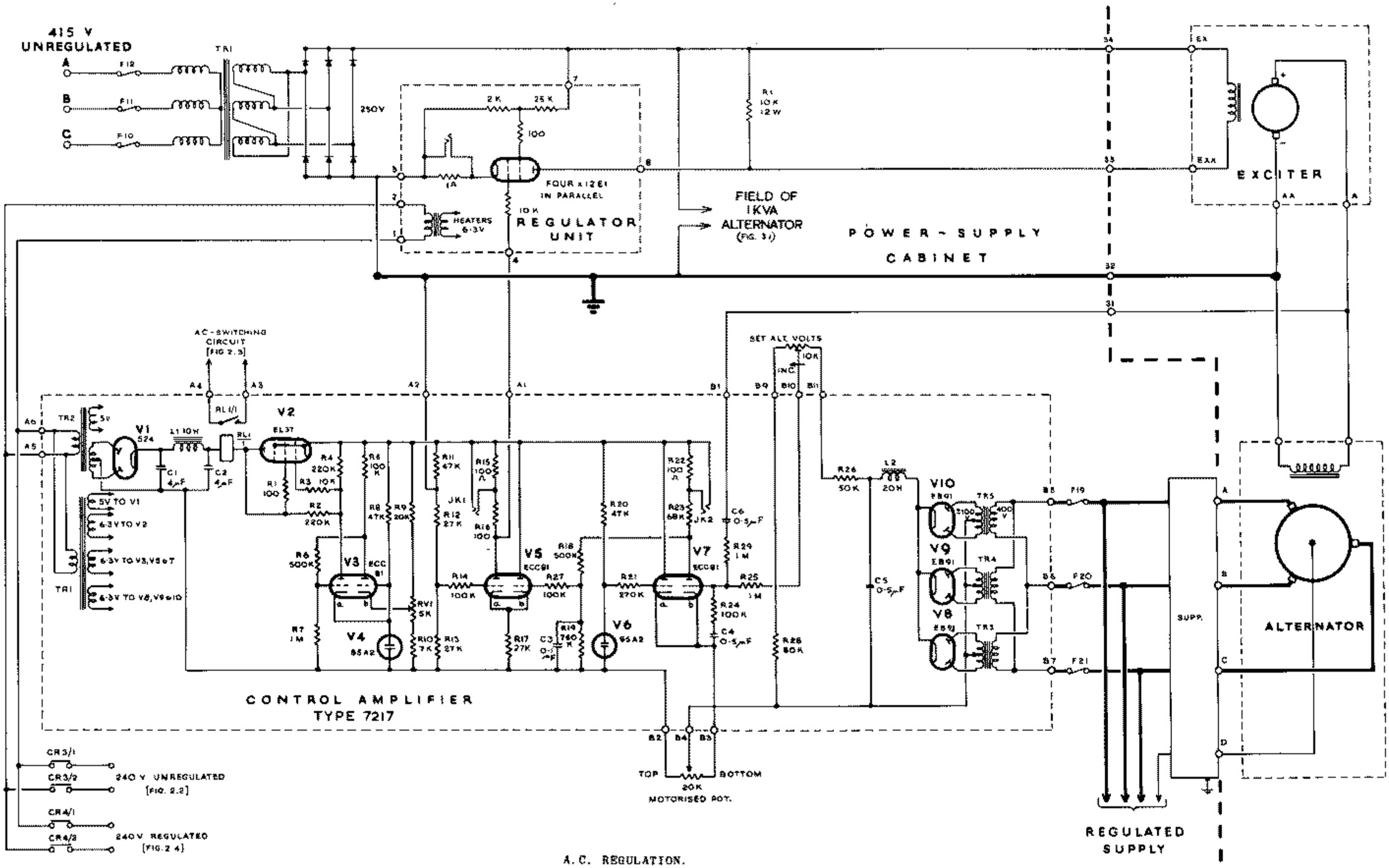

FIG. 2.5

A.C. REGULATION.