RESISTORS TYPES AND TOLS.		CAPACITORS TYPES AND TOLS.	
ERIE TYPE 9 10%	83,86,89,90,91,92,93.	TCC CP37H 20%	41 42
ERIE TYPE 8 10%	84,85,94,98.	" " "	43
WELWYN 3111	87	ERIE 10K-K	44
WELWYN 3112	88		

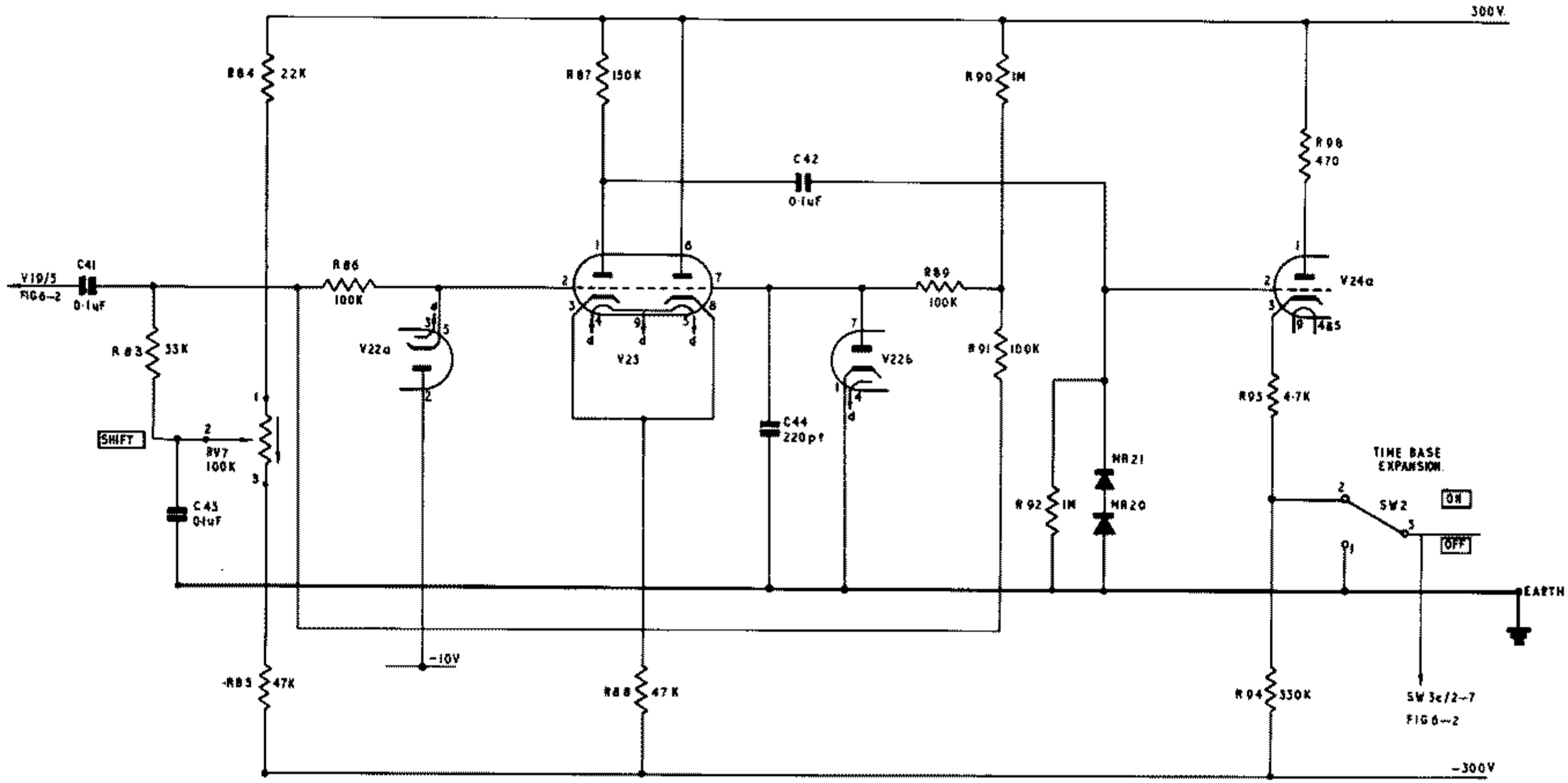

MONITOR EXPANDED TIME BASE.

FIG. 6.3