RESISTOR TYPES & TOLERANCE.			CAPACITORS TYPES & TOLERANCES	
108	± 5%	173	CP37N TOC ± 20%	8.53.
9	± 10%	11, 14, 12, 19, 107, 110, 108, 109.	CP44K6TCC. ± 20%	8.52.
8	± 10%	5. 6. 7. 8. 9. 10. 15. 16, 172. 96	CP47N " "	110, 61.
6	± 10%	101, 102, 103, 104, 105, 106, 111, 112.	M.K ERIE ± 20%	95.93

NOTES	
1	ARROW AGAINST POTENTIOMETER INDICATES MOVEMENT OF SLIDER FOR CLOCKWISE ROTATION OF KNOB.
2	ALL SWITCHES ARE NUMBERED CLOCKWISE AS SEEN FROM FRONT OF PANEL.

Y PLATE (S·1)		
1	EARTH.	
2	WAVE FORM.	FAST STORE.
3	CLOCKED DIGITS	
4	NORMAL	
5	METER SWITCH.	
6	PROBE 1A.	
7	" 1Z.	
8	" 2A.	
9	" 2Z.	
10	" 3A.	
11	" 3Z	

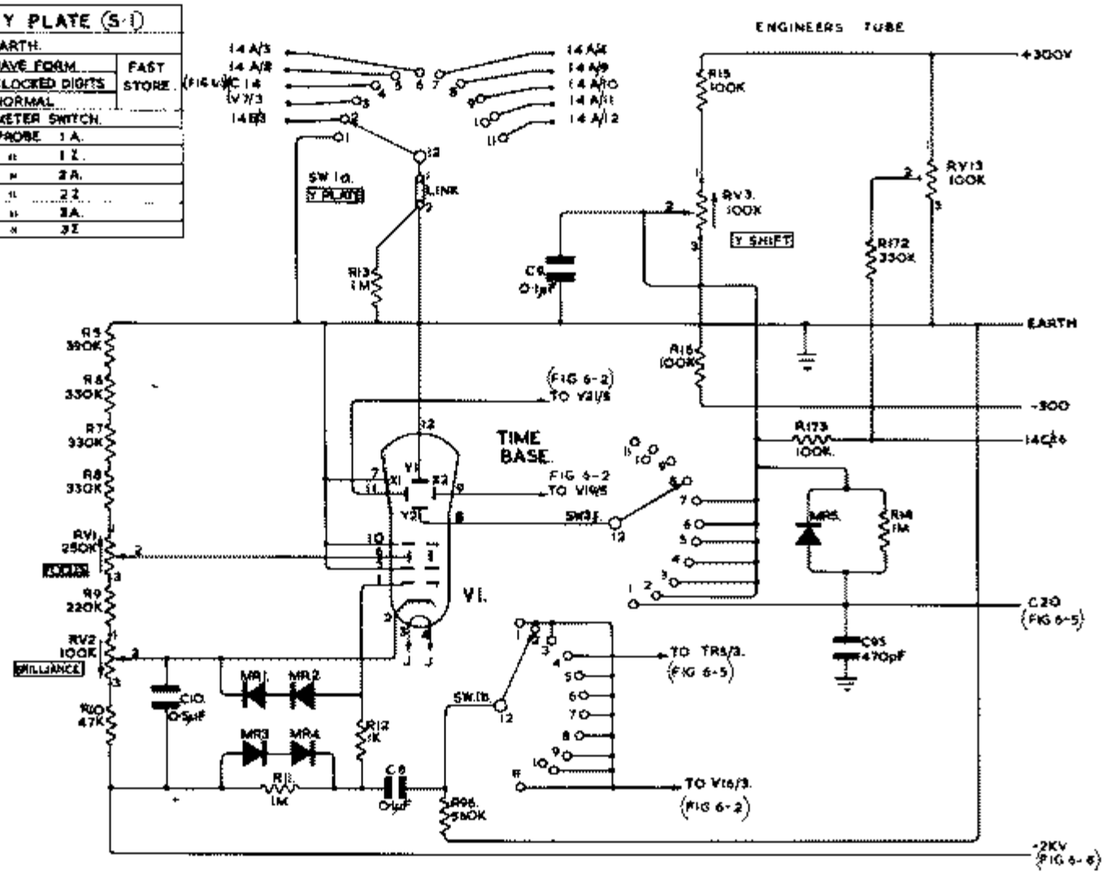

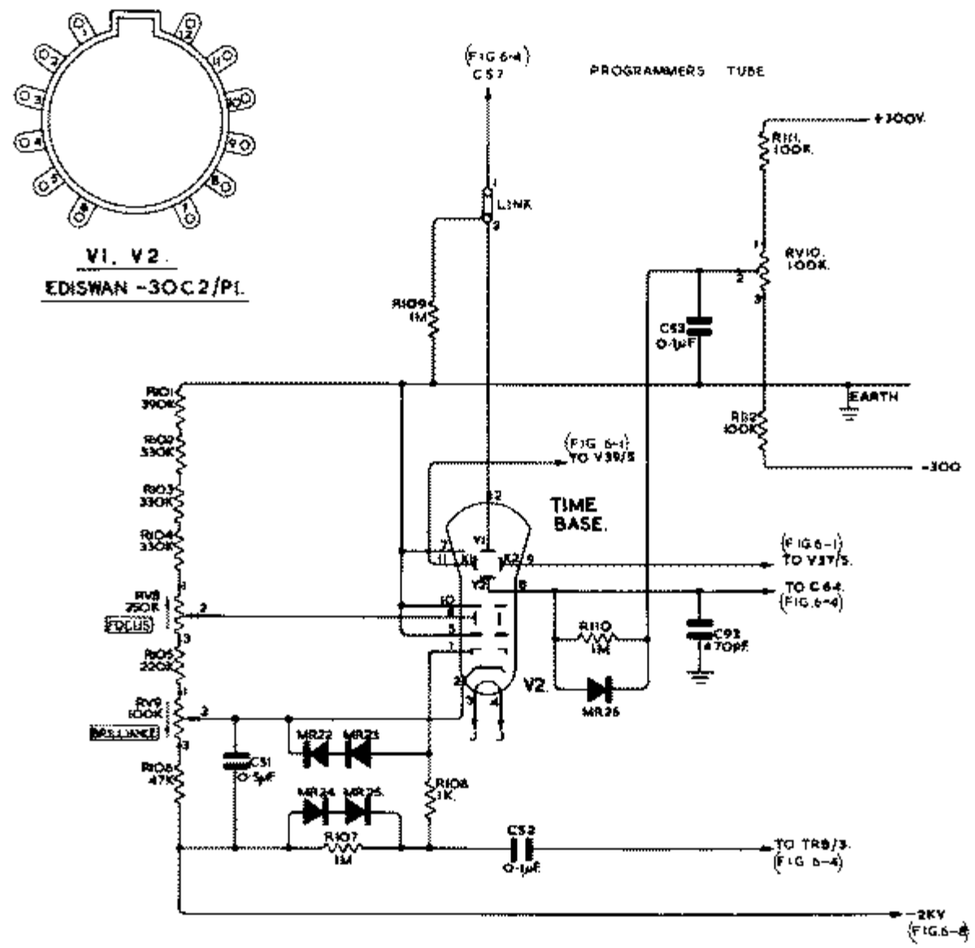

MONITOR C.R.T. CIRCUITS.

FIG. 6.6