RESISTORS TYPES & TOLERANCE			CAPACITORS TYPES & TOLERANCE		
ERIE TYPE 108	5%	140, 141.	TCC CP37H.	20%	34, 55, 58, 59, 60, 61, 64.
ERIE TYPE 8	"	199, 121, 127, 124, 171.	" CP306	25%	57.
WELWYN AW515.		115, 123, 129, 137.			
ERIE TYPE 9	10%	114, 116, 125, 128, 128, 131, 132,	" N750L	"	97.
" " " "		130, 133, 134, 135, 139, 170.	" N750K	"	63.
" " " "		117, 118, 119, 120, 122, 205.	TCC CP32N.	25%	62.
WELWYN AW515.		136.	HUNT W97.		56, 75.
PAINTON F306		113, 203.			

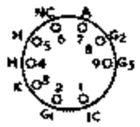

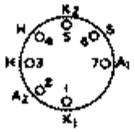

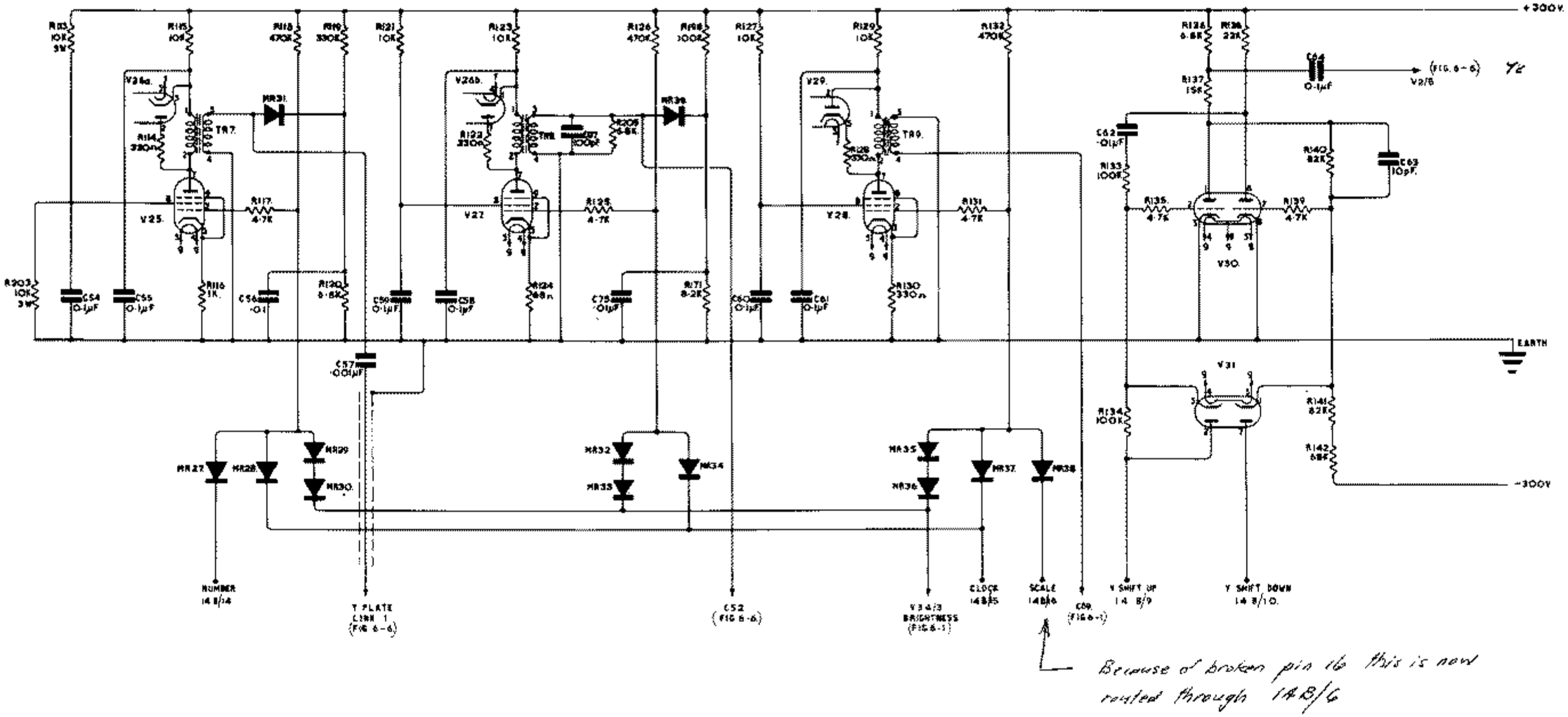

MONITOR R.H.S. 'Y' PLATE DEFLECTION.

FIG. 6.4