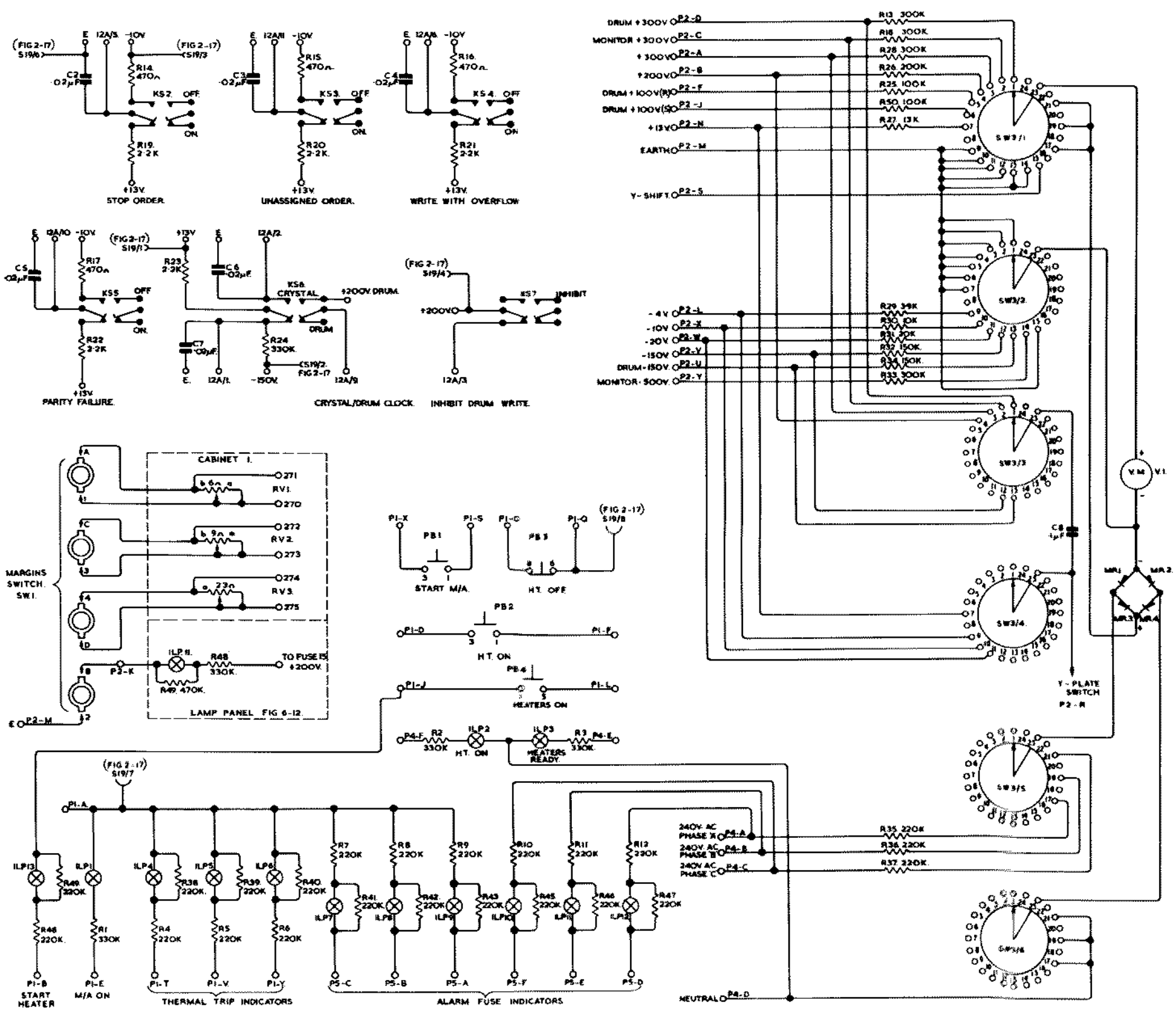

CIRCUIT REF.	VALUE	TOL %	RATING	TYPE
R1, R2, R3	330K	± 10	1/4W	ERIE 9.
R4 TO R12	220K	± 10	1/4W	ERIE 9.
R13, R18	300K	± 1	1/4W	ERIE 108
R26 & 33	300K	± 1	1/4W	ERIE 108
R14 TO R17	470Ω	± 10	1/4W	ERIE 9
R19 TO R22	2.2K	± 10	1/4W	ERIE 9
R23, R36	100K	± 1	1/4W	ERIE 108
R24	200K	± 1	1/4W	ERIE 108
R25	330K	± 10	1/4W	ERIE 108
R27	13K	± 1	1/4W	ERIE 108
R29	3.9K	± 1	1/4W	ERIE 108
R30	10K	± 1	1/4W	ERIE 108
R31	20K	± 1	1/4W	ERIE 108
R32, R34	150K	± 1	1/4W	ERIE 108
R35 TO R37	220K	± 1	1/4W	ERIE 108
R38 TO R46	220K	± 10	1/4W	ERIE 9
C2 TO C5	.02μF	± 20		TCC CP 33B
C6	1μF	± 20		TCC CP 37B
MR1 TO MR4				BTH CG 10B
RS 2-7				PG TYPE 6B
S1				[illegible]
S3				RSF MODEL 6
VM				[illegible]
PO S1-4				[illegible]

VOLTMETER SWITCH POSITION	
1	DRUM + 300V
2	MONITOR + 300V
3	+ 300V
4	+ 200V
5	DRUM + 100V (R)
6	DRUM + 100V (S)
7	+ 13V
8	
9	- 4V
10	- 10V
11	- 20V
12	- 150V
13	DRUM - 150 V.
14	MONITOR - 300V
15	Y SHIFT
16	
17	240V PHASE A
18	
19	240V PHASE B
20	
21	240V PHASE C
22	
23	POLE
24	

NOTE

PLESSEY PLUGS P1, P2, P4 AND P5 ARE CONNECTED TO RELAY PANEL SK1, SK2, SK4 AND SK5. (SEE FIG 5-1)

SOCKET 19 CONNECTIONS (TO PROGRAMMERS PANEL)	
PIN 1	+ 13V
PIN 2	- 150V
PIN 3	- 10V
PIN 4	+ 200V
PIN 5	EARTH
PIN 7	LAMP ILP4
PIN 8	PUSH BUTTON PB 3-6

ENGINEER'S CONTROL PANEL.

FIG. 2.18