RESISTORS TYPES & TOLS.		CAPACITORS TYPES & TOLS.	
WELWYN AW.3112	9, 27, 34, 42, 45.	TCC 37N 20%	11 12, 15 16 17 18, 20.
WELWYN AW.3115	41	CP. 303 25%	14
ERIE TYPE 108 5%	45, 46, 47.	CP 32 N "	19
" " 8 10%	23, 32, 28.		
" " 9 10%	18,20,21,22,23,24,2043,26,[illegible]	" N750L "	98
" " " "	29,30,31,33,35,37,39,44	" N750K "	21
PAINTON P306	17, 202	HUNT W97 "	13, 74.

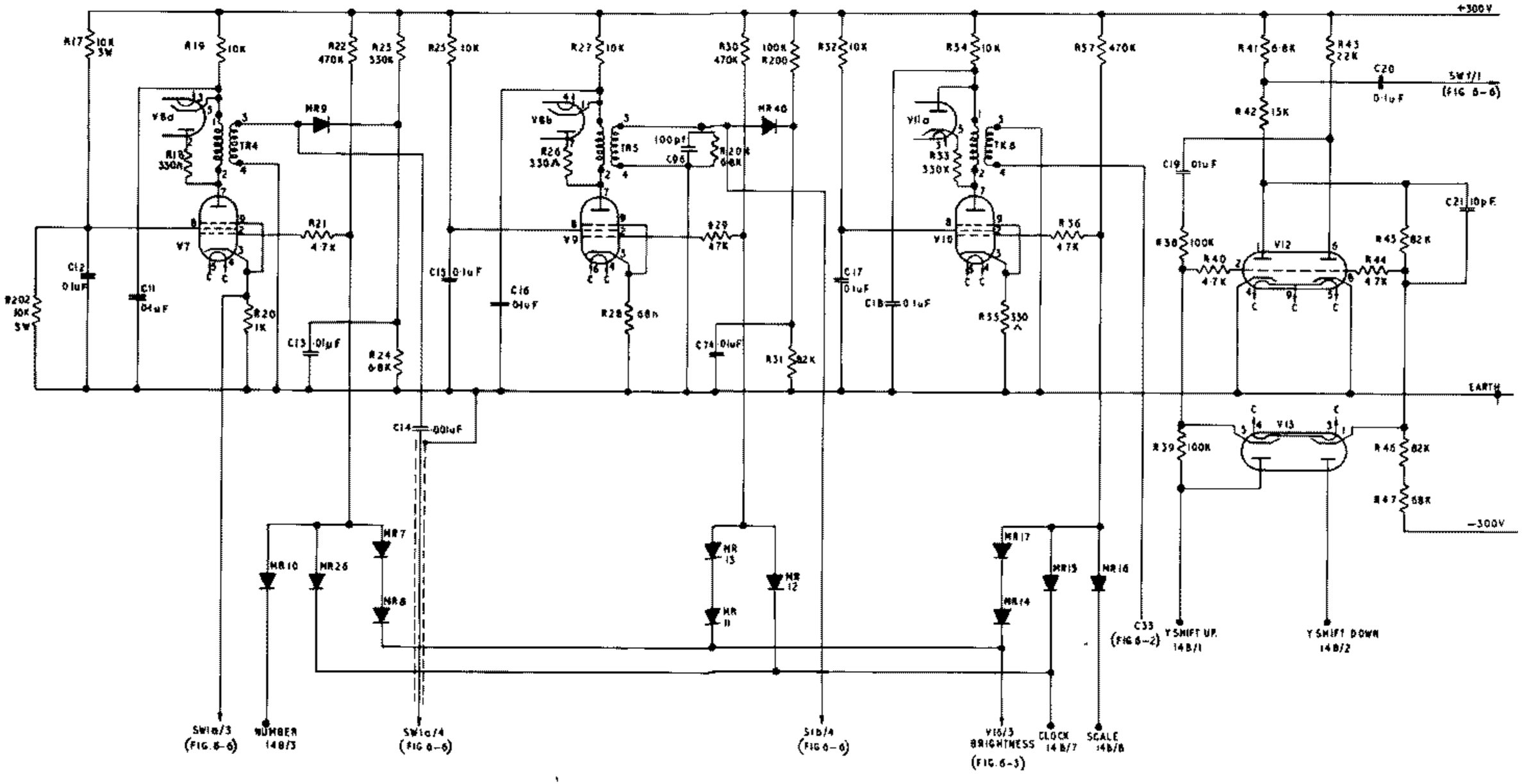

MONITOR L.H.S. 'Y' PLATE DEFLECTION.